# 2004

# Destiny SE Series

## Repair Parts Catalog

**3875** Taos 8'
**3843** Tucson 8'
**3856** Yuma 9 ½'
**3872** Cortez 11'
**3873** Pecos 11'

# 2004 DESTINY SE series

## 3875 TAOS 8'

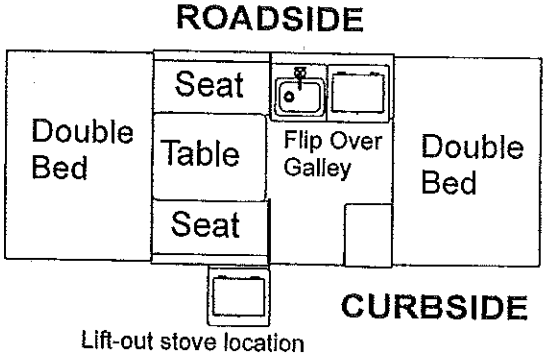


## 3843 TUCSON 8'

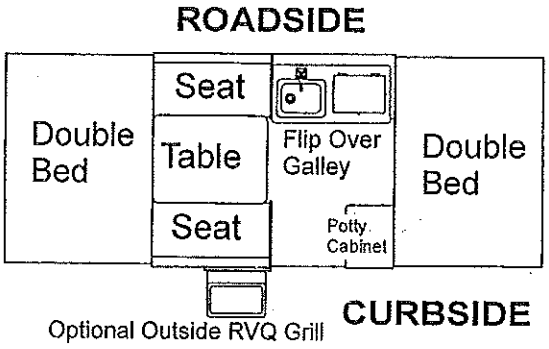


## 3856 YUMA 9 1/2'

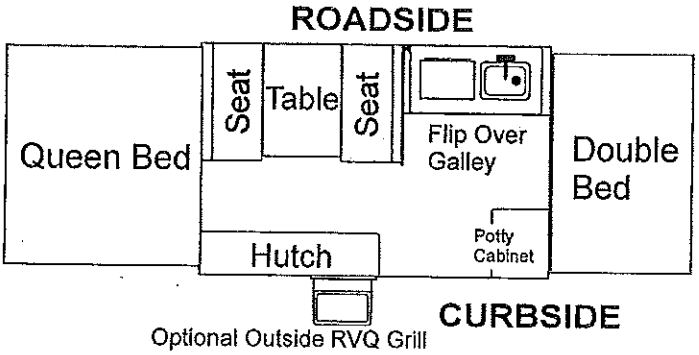


## 3872 CORTEZ 11'

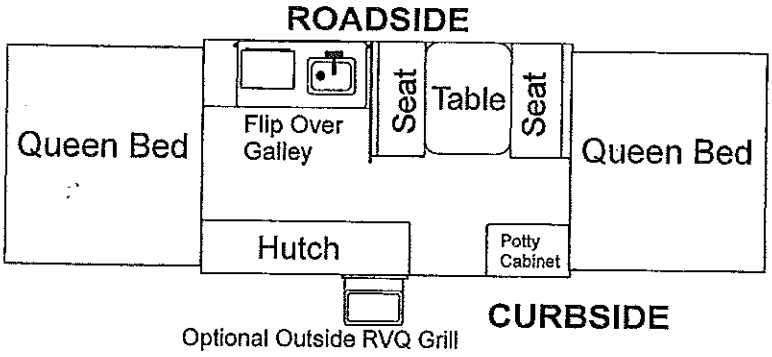


## 3873 PECOS 11'

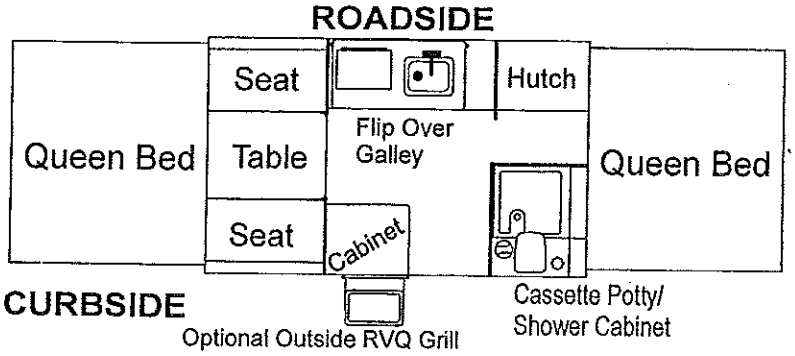

## *TABLE OF CONTENTS*


| DESCRIPTION | PAGE |
|---|---|
| Access door key | 28 |
| Access door assembly & related parts | 8 |
| Auto extension | 10 |
| Axle assemblies & related parts | 5 |
| Backrest assemblies & covers | 27 |
| Bed assemblies | 22, 23 |
| Bed extensions & related parts | 22 |
| Body panel right rear (curbside) | 7 |
| Body panel left side (roadside) | 9 |
| Body panel front & rear | 6 |
| Body panel right front (curbside) | 7 |
| Bumper & related parts | 6 |
| Cabinet assy. (csf corner cabinets) | 18 |
| Cabinet assy. curbside rear 3872, 3856, 3873 | 20 |
| Caulking | 10 |
| Converter & related parts | 18 |
| Cooler (built-in) | 14,15,16,17 |
| Cooler "Igloo" 3875 Taos | **4757C1251** |
| Corner bulkhead assembly | 2 |
| Coupler assembly | 2 |
| Crank-up/crank-down components | 4 |
| Crank handle | 28 |
| Cushion assemblies & covers | 27 |
| Door bulkheads | 8 |
| Drain hose (used on sinks) | 10 |
| Drape packages & related parts | 27 |
| Drawer assemblies 3875 Taos | 12 |
| Electric brakes & related parts | 5 |
| Fire extinguisher & components | 20 |
| Floor covering | 2 |
| Frame assembly & related parts | 2 |
| Furnace grill | 14,15 |
| Gas detector | 19 |
| Gas hose (gas bottle hook-up) | 29 |
| Gas bottle mounting brackets | 28 |
| Gas grill RVQ | 29 |
| Gas bottle cover (black vinyl) | 29 |
| Gas bottle & related parts | 29 |
| Gas quick disconnect (outside grill/stove) | 29 |
| Grease cap (dust cap) | 5 |
| Hub assembly & related parts | 5 |
| Hutch assembly (roadside frt. 3873 Pecos) | 21 |
| Hutch assembly (curbside rear 3872 Cortez) | 20 |
| Lift assemblies & related parts | 3 |
| Lift trim & miter covers | 7,9 |
| Lower galley components (3875 Taos) | 12 |
| Lower galley components (3843 Tucson) | 14 |
| Lower galley components (3856 Yuma) | 15 |
| Lower galley components (3872 Cortez) | 16 |
| Lower galley components (3883 Pecos) | 17 |
| Lug wrench | 28 |
| Mattress assemblies & covers | 23 |
| Paint (spray & quart can) | 10 |
| Paneling & trim | 18 |
| Parts package & components | 28 |
| Pigtail (car end) | 2 |
| Potty "cassette" (3873 Pecos) | 21 |

| DESCRIPTION | PAGE |
|---|---|
| Power cord (converter) | 18 |
| Receptacle (exterior) | 7 |
| Receptacle (interior) | 18 |
| Refrigerator vents | 9 |
| Regulator & fittings | 29 |
| RVQ gas grill /hose kit | 29 |
| Safety chains | 28 |
| Screen door & related parts | 26 |
| Seat bench component parts | 19 |
| Sink & related parts | 10 |
| Shower curtain | 27 |
| Shower curtain rod (3873 Pecos) | 31 |
| Shower drain components (3873 Pecos) | 21 |
| Shower stall cover board (3873 Pecos) | 21 |
| Shower stall w/potty (3873 Pecos) | 21 |
| Shower head & hose (3873 Pecos) | 21 |
| Spare tire cover (black vinyl) | 2 |
| Spare tire mount package | 2 |
| Stabilizer assembly | 2 |
| Stabilizer handle/lug wrench combo | 28 |
| Step components (outside step) | 8 |
| Stove components (upper galley stove) | 11 |
| Stove components (lift-out stove 3875 Taos) | 13 |
| Table assemblies & related parts | 11 |
| Taillights (rear body panel) | 6 |
| Tent support assemblies & related parts | 19 |
| Tenting & related parts | 30 |
| Thermostat (Hydro Flame) | 19 |
| Thrust bearing | 4 |
| Tie backs (curtains) | 27 |
| Tire & rim | 2 |
| Tire cover "black vinyl" | 2 |
| Tongue jack & related parts | 4 |
| Top assemblies & related parts | 31 |
| Trim tape kits | 7, 8, 9 |
| Upper galley assembly (3875 Taos) | 12 |
| Upper galley assembly (3843 Tucson) | 14 |
| Upper galley assembly (3856 Yuma) | 15 |
| Upper galley assembly (3872 Cortez) | 16 |
| Upper galley assembly (3892 Pecos) | 17 |
| Valance package | 27 |
| Water heater | 25 |
| Water pump & related parts | 10 |
| Water system & related parts | 24, 25 |
| Wheel well | 2 |
| Whiffletree & related parts | 3 |
| Zippers (tent sections) | 30 |


| | |
|---|---|
| Axle/Brakes - Dexter | 219/295-1900 |
| Cassette Potty - Thetford | 800/521-3032 |
| Converter - World Friendship Co. | 800/900-2468 |
| Furnace - Hydro Flame #7916-11 | 800/546-8759 |
| Hand pump - Shurflo | 800/762-8094 |
| Mixer Faucet - Empire Brass | 800/431-6440 |
| Refrigerator - Dometic | 800/216-5115 |
| Stove - Atwood Greenbrier | 800/646-8557 |
| Stove - Vitco | 877/825-8528 |
| Tires - Kenda | 800/225-4714 |
| Water heater - #5031E | 423/775-2131 |
| Yakima bike rack - to obtain repair parts | 800/925-4621 |

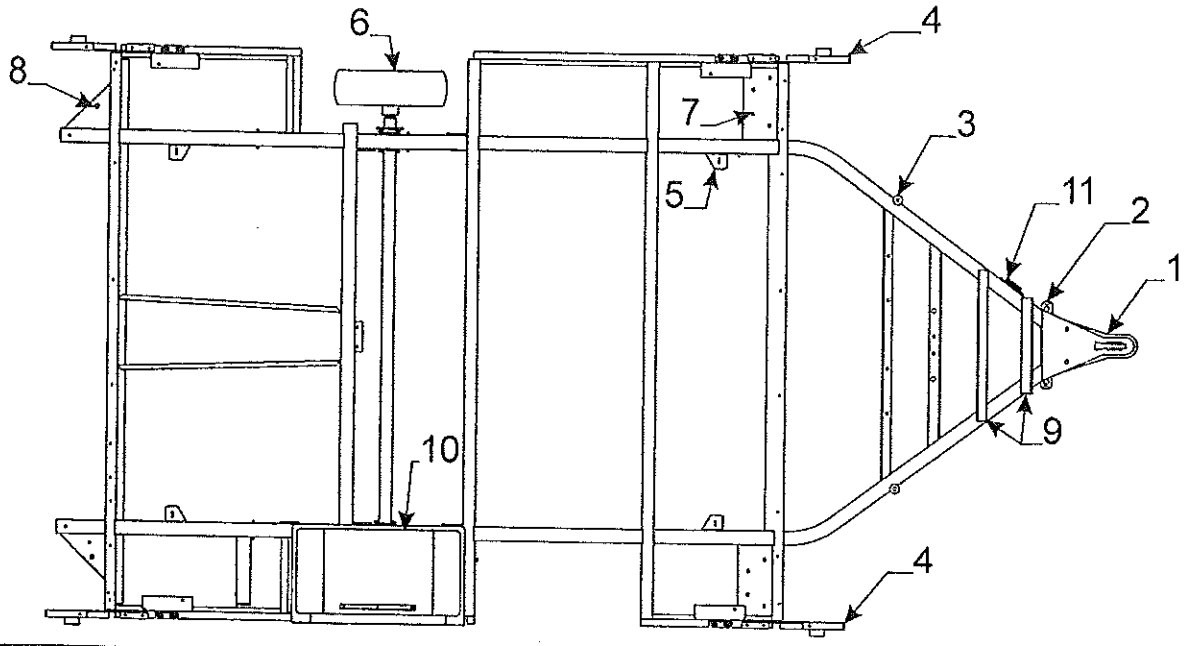


| Flat Rate | Code | Part # | Description |
|---|---|---|---|
| | | | **Frame Assembly Component Parts** |
| 1.50 | 1 | 4742-2001 | coupler assembly |
| .25 | | 4714A2211 | coupler repair kit |
| .75 | 2 | 4748-6611 | chain bar w/pins |
| .75 | | 4720A3561 | chain bar w/o pins |
| .50 | 3 | 4758-0381 | bed leg pin & washer |
| 2.00 | 4 | 4769-5451 | corner bulkhead csf/rsr (all except 3843, 75) |
| 2.00 | | 4769-5441 | corner bulkhead rsf/csr (all except 3843, 75) |
| 2.00 | | 4769-6541 | corner bulkhead csr/rsf 3843 Tucson |
| 2.00 | | 4769-6531 | corner bulkhead rsr/csf 3843 Tucson |
| 2.00 | | 4747A5511 | corner bulkhead csr/rsf 3875 Taos |
| 2.00 | | 4747A5501 | corner bulkhead rsr/csf 3875 Taos |
| | | 1203C8751 | rivet m25 (rivet bulkhead to frame) |
| .75 | 5 | 4732E3671 | adjustable pulley brkt. x4 |
| .25 | | 4715A5371 | pulley & bearing m10 |
| | | 4720C1578 | short pin m4 |
| | | 1204B1081 | cotter pin m10 |
| .25 | 6 | 4757A2468 | tire & rim 13" lr "C" 3873 |
| .25 | | 4754C1558 | tire & rim 12" lr "C" 3843,56,72,75 |
| | | 4747G4841 | black vinyl tire cover 12" tire |
| | | 4723G3161 | black vinyl tire cover 13" tire |
| | 7 | 4769-6841 | stabilizer gusset csf (all except 3843,75) |
| | | 4769-6851 | stabilizer gusset rsf (all except 3843, 75) |
| | | 4749A5861 | stabilizer gusset frt. x2 3843, 3875 |
| | 8 | 4752-6001 | stabilizer gusset rear (all) |
| | 9 | 4716A7151 | frt./rear battery angle pkg. |
| 2.00 | 10 | 4754D0531 | wheel well assy. x2 (all except 3843, 3875) |
| 2.00 | | 4747A4161 | wheel well assembly x2 3843, 3875 |
| .75 | 11 | 4720B3331 | jack bracket (welded to tongue) |
| | 12 | 4746A5591 | pigtail - "car end" (all) |
| | 13 | 4753B3751 | trailer harness (all ) |
| | 14 | 1201-8738 | 3/8" clamp |
| | | 1203C8721 | steel rivet m25 |
| | 15 | 4742-8108 | 1 ¼" snap bushing |
| | 16 | 4716A5001 | 12 volt power harness |
| .15 | 17 | 4749B5531 | 12v wire harness m2 (battery connection ) |
| | 18 | 4716A4701 | 12 volt cap & plug m2 |
| .25 | 19 | 4720D0731 | stabilizer assembly |
| | | 4739-2298 | nut (x2 per stabilizer) |
| .25 | 20 | 4769-6551 | spare tire mount kit 3843 |
| .25 | | 4769-5461 | spare tire mount kit 3856,72,73 |

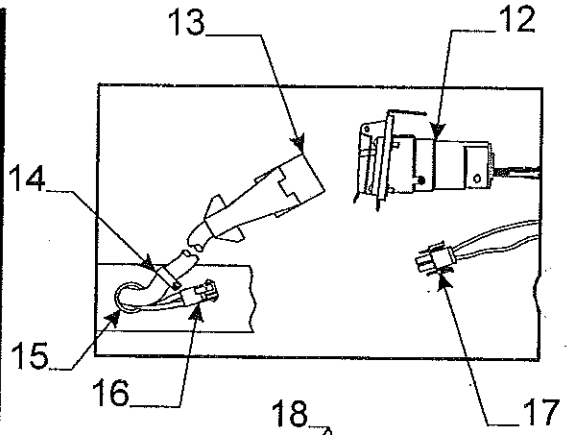


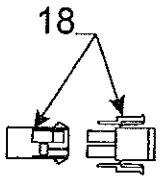


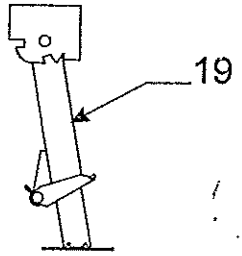


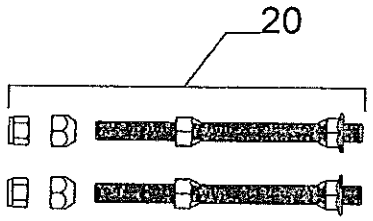


* 6610007204P floor covering pkg. (7 1/2' x 14' )
* Prior Authorization Needed From Factory

| | | |
|---|---|---|
| 1.25 | 4716-0031 | lift assembly roadside rear/curbside front (all except Taos) |
| 1.25 | 4716-0041 | lift assembly roadside front/curbside rear (all except Taos) |
| 1.25 | 4716-0071 | lift assembly roadside rear/curbside front (3875 Taos only) |
| 1.25 | 4716-0081 | lift assembly roadside front/curbside rear (3875 Taos only) |

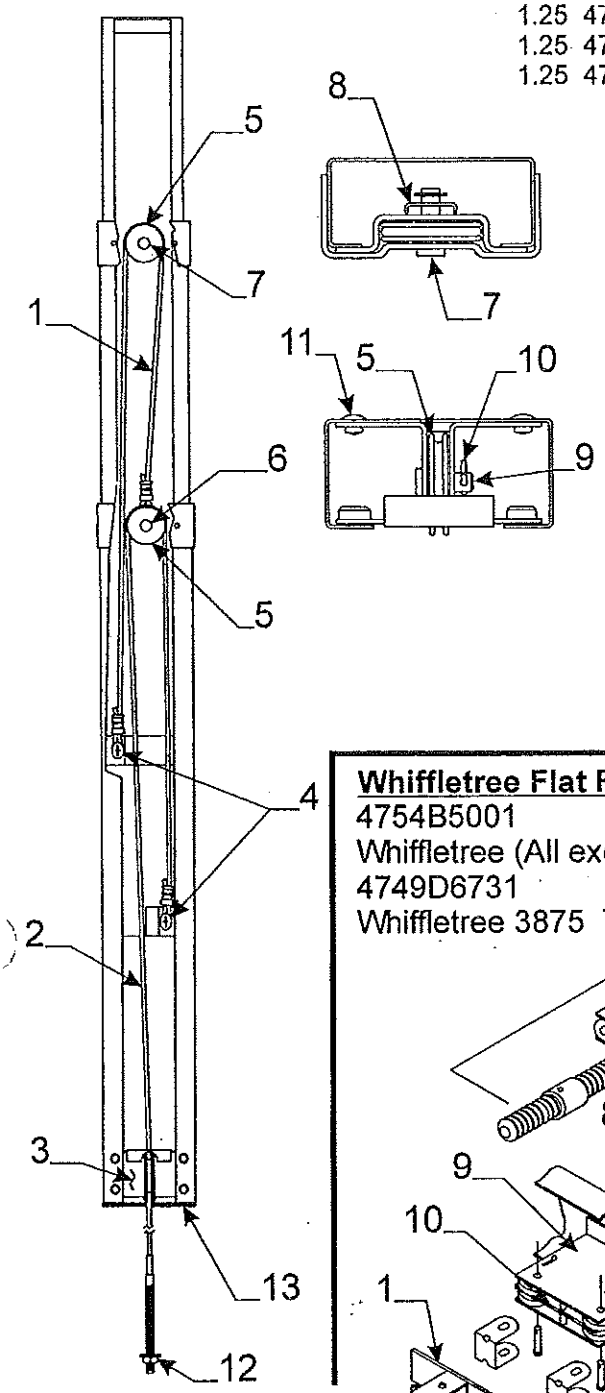


| Flat Rate | Lift Assembly Component Parts Code | Part # | Description |
|---|---|---|---|
| .75 | 1 | 4720D5271 | cable assy. x1 m2 (all except Taos) |
| .75 | | 4720C5271 | cable assembly x2 m2 3875 Taos |
| | | 4720C1691 | cable crimp m20 |
| 1.25 | 2 | 4772-0201 | 194 ½" long cable & crimp |
| | | 4744-1318 | copper cable crimp m10 |
| 1.25 | 3 | 4731C5801 | butterfly bracket assy. |
| .05 | 4 | 4749-2081 | screw m6 |
| .50 | 5 | 4715A5371 | steel pulley & bearing m10 |
| .25 | 6 | 4747-8931 | long pin x2 |
| | | 4730B0981 | retaining ring m12 |
| .25 | 7 | 4749-4061 | short pin m4 |
| | | 4730B0981 | retaining ring m12 |
| .25 | 8 | 4749A2028 | retaining clip |
| .45 | 9 | 4720C1578 | lift pin m4 |
| | 10 | 1204B1081 | cotter pin m10 |
| | 11 | 1203-8641 | rivet m25 |
| | 12 | 1201B6378 | 1/4" lock nut |
| | | 1202E0408 | washer |
| | 13 | 4747-0321 | lift cover bottom |

**Whiffletree Flat Rate 2.00**
4754B5001
Whiffletree (All except 3875)
4749D6731
Whiffletree 3875 Taos

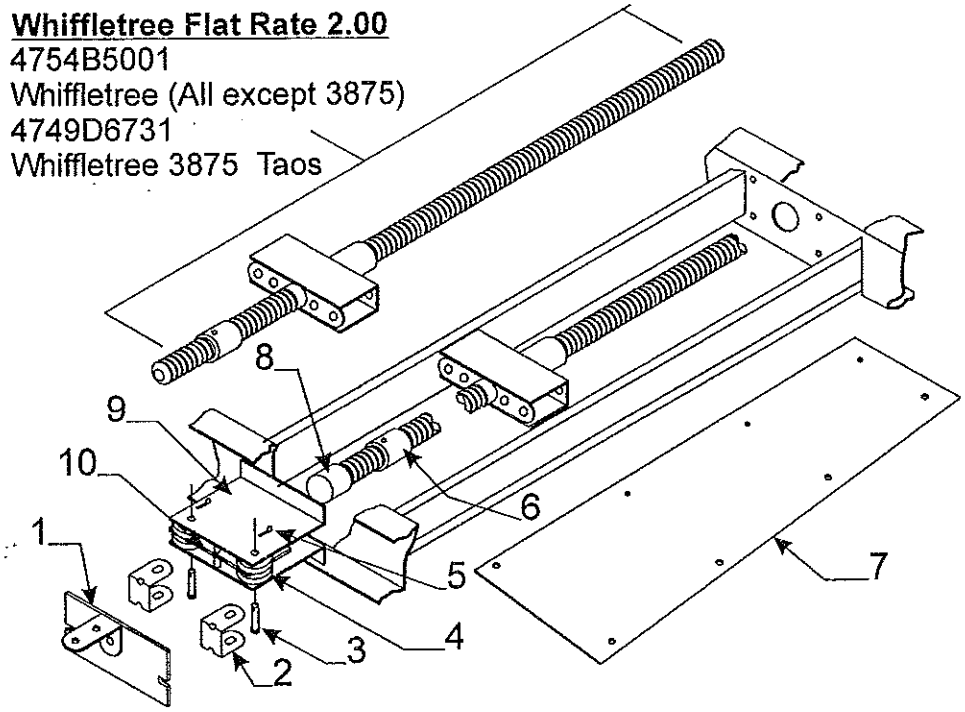


| Flat Rate | Whiffletree & Related Parts Code | Part # | Description | Flat Rate | Code | Part # | Description |
|---|---|---|---|---|---|---|---|
| .15 | 1 | 4749A821 | mud flap & brkt. | .25 | 7 | 4752C4921 | whiffletree pan cover (all except Taos) |
| .50 | 2 | 4744B1741 | cable retainer x2 | .25 | | 4757-1121 | whiffletree pan cover 3875 Taos |
| .20 | 3 | 4720J1561 | long pin m4 | | | 4755-4611 | tek screw m25 (fasten pan in place) |
| .50 | 4 | 4715A5371 | pulley & bearing m10 | 2.00 | 8 | 4730D1291 | screw socket (welded) |
| .10 | 5 | 1204B1081 | cotter pin m10 | 2.00 | 9 | 4720-1551 | pulley plate |
| 1.60 | 6 | 4710B4248 | bushing | .50 | 10 | 4715D5661 | pulley spacer |
| | | 4744A1301 | solid shear pin m10 | | | | |

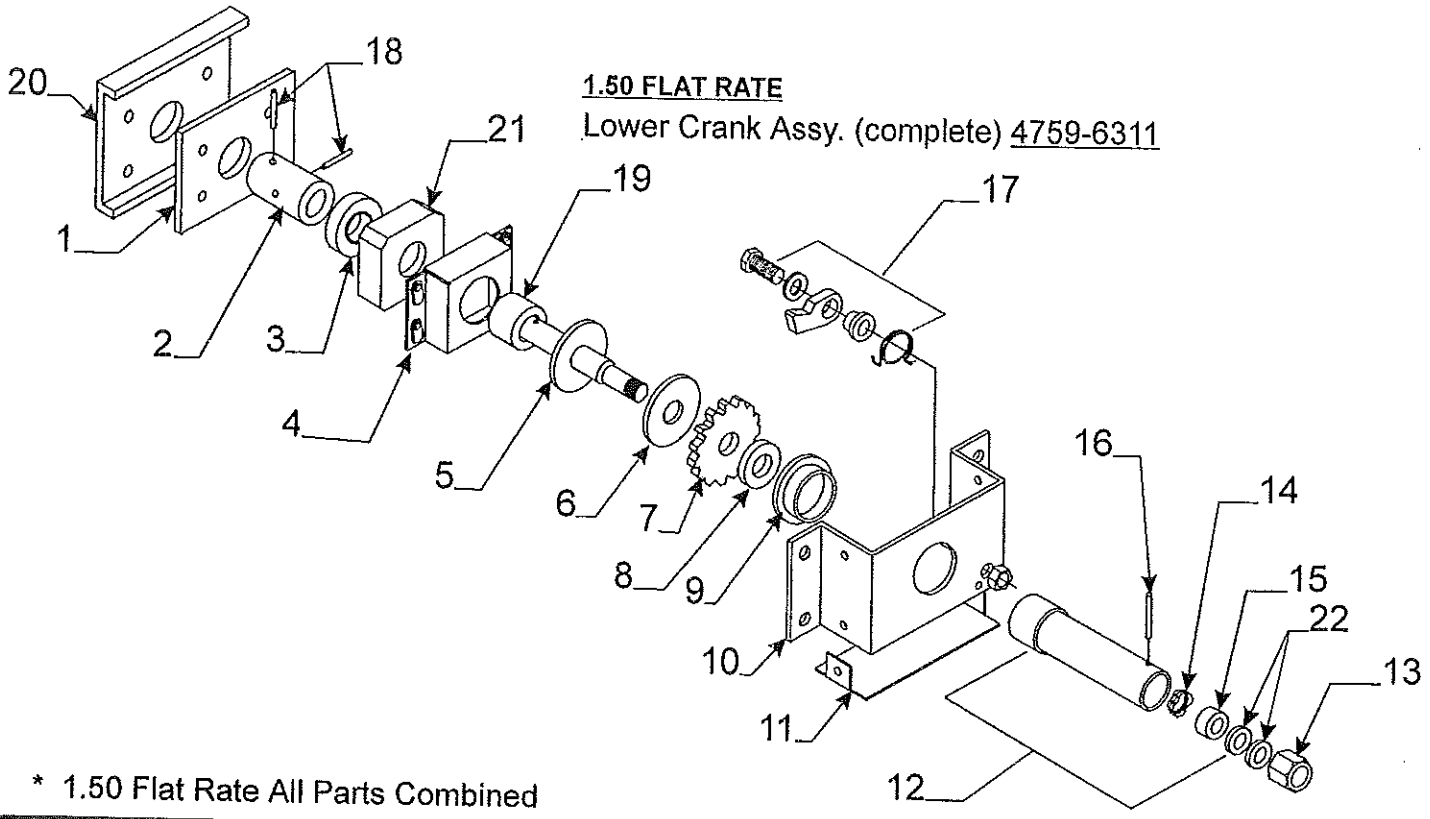


**1.50 FLAT RATE**

Lower Crank Assy. (complete) 4759-6311

* 1.50 Flat Rate All Parts Combined

| Flat Rate | Code | Part # | Description |
|---|---|---|---|
| | | **Crank Up/Crank Down Component Parts** | |
| | 1 | 4756-8321 | bearing housing plate |
| 1.50 | 2 | 4756-8301 | coupler bushing |
| 1.50 | 3 | 4720C2421 | thrust bearing |
| * | 4 | 4750A9251 | bearing housing |
| | | 4738A0898 | hex bolt x4 |
| * | 5 | 4751-3701 | drive shaft |
| * | 6 | 4751-3561 | pressure plate |
| * | 7 | 4751-4831 | ratchet wheel |
| * | 8 | 4751-3581 | pressure washer |
| * | 9 | 4751A3591 | shaft bushing |
| * | 10 | 4751B3691 | crank housing |
| | | 4731-3878 | hex head bolt x4 |
| | | 1201B6038 | lock nut x4 |

| Flat Rate | Code | Part # | Description |
|---|---|---|---|
| * | 11 | 4751-3721 | housing cover plate |
| | | 1203-8641 | rivet m25 |
| .75 | 12 | 4716A1741 | drive hub ext. pkg. |
| | | **Note: pkg. Includes parts marked w/* asterisk** | |
| | 13 | *4751-3551 | 5/8" nut |
| .50 | 14 | *4752-3921 | handle spring x1 m2 |
| .50 | 15 | *4751-4671 | nylon washer x1 |
| .10 | 16 | *4747A9451 | spiral roll pin x1 m6 |
| .60 | 17 | 4716-1221 | ratchet pawl pkg. |
| 1.00 | 18 | 4744A1301 | shear pin m10 |
| 1.50 | 19 | 4756A8311 | spacer bushing |
| | 20 | 4750A9261 | plate "painted" |
| 1.50 | 21 | 4756-8441 | bearing house square spacer |
| | 22 | 4757-3938 | washer x2 |

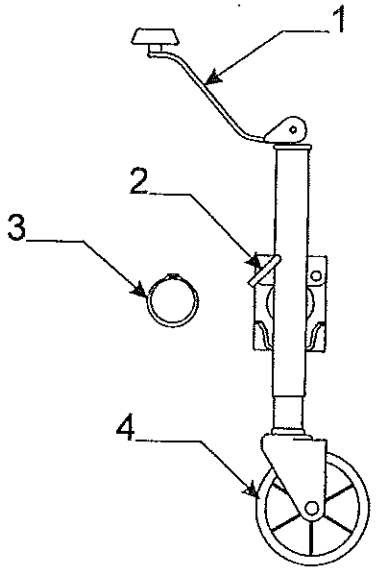


Flat Rate .10 Jack Removal

**Tongue Jack Assembly (4720C6661) "Norco"**

| Flat Rate | Code | Part # | Description |
|---|---|---|---|
| .15 | 1 | 4716-1951 | jack handle kit |
| .15 | 2 | 4716-1981 | locking plunger kit |
| .10 | 3 | 4720A3341 | snap ring m2 |
| .25 | 4 | 4716-1971 | jack wheel nut & bolt |

Flat Rate .50 Per Side

**Electric Brake Pkg. 7" x 1 1/4" (4714H2011)**

| Flat Rate | Code | Part # | Description |
|---|---|---|---|
| .50 | 1 | 4733A3521 | 7" brake assembly (right hand) |
| .50 | | 4733A3531 | 7" brake assembly (left hand) |
| .50 | 2 | 4714A2201 | 7" grease seal x1 m4 |
| .50 | 3 | 4716-1101 | 7" bearing, race & seal pkg. |
| .30 | 4 | 4716A1071 | 7" hub & drum x2 |
| .05 | 5 | 4747A9528 | lug nuts x5 |
| .10 | 6 | 4714A3061 | washer, nut & retainer pkg. |
| .05 | 7 | 4714C0621 | EZ lube grease cap m4 |

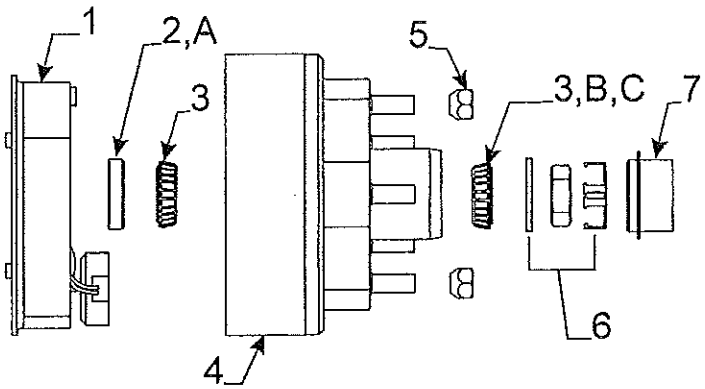


**Crossover Numbers To Purchase Locally**

A 13194TM or 198138SP21 Grease Seal
B L44649 Bearing
C L44610 Race

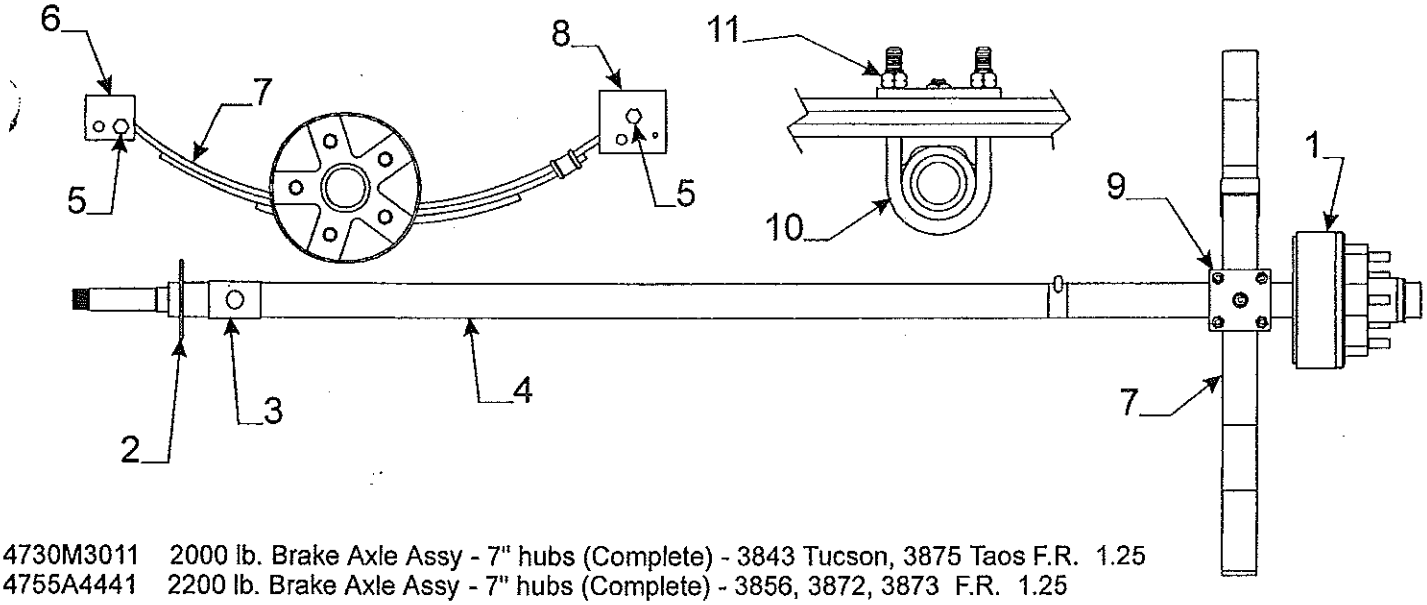


4730M3011 2000 lb. Brake Axle Assy - 7" hubs (Complete) - 3843 Tucson, 3875 Taos F.R. 1.25
4755A4441 2200 lb. Brake Axle Assy - 7" hubs (Complete) - 3856, 3872, 3873 F.R. 1.25

**Axle & Spring Components**

| Flat Rate | Code | Part # | Description | Flat Rate | Code | Part # | Description |
|---|---|---|---|---|---|---|---|
| * | 1 | **Note:** refer above for hub & components | | 2.00 | 6 | 4741A3398 | spring shackle (rear) |
| * | 2 | 4741A8471 | brake plate | .75 | 7 | 4741B3381 | leaf spring (2 ply) 3843, 3875 |
| * | 3 | 4741-8461 | spring pad channel m2 | .75 | | 4735G2201 | leaf spring (3 ply) 3856,72,73 |
| 1.00 | 4 | 4716A1571 | axle beam 3843, 3875 | 2.00 | 8 | 4741C3398 | spring shackle (front) |
| 1.00 | | 4716F6251 | axle beam 3856,72,73 | .50 | 9 | 4741-8458 | u-bolt plate |
| .25 | 5 | 4737A1318 | shackle bolt | .25 | 10 | 4741A8438 | u-bolt |
| | | 4741-9498 | shackle bolt nut | | 11 | 4741-9358 | u-bolt nut |

** PRIOR AUTHORIZATION NEEDED FROM FACTORY*

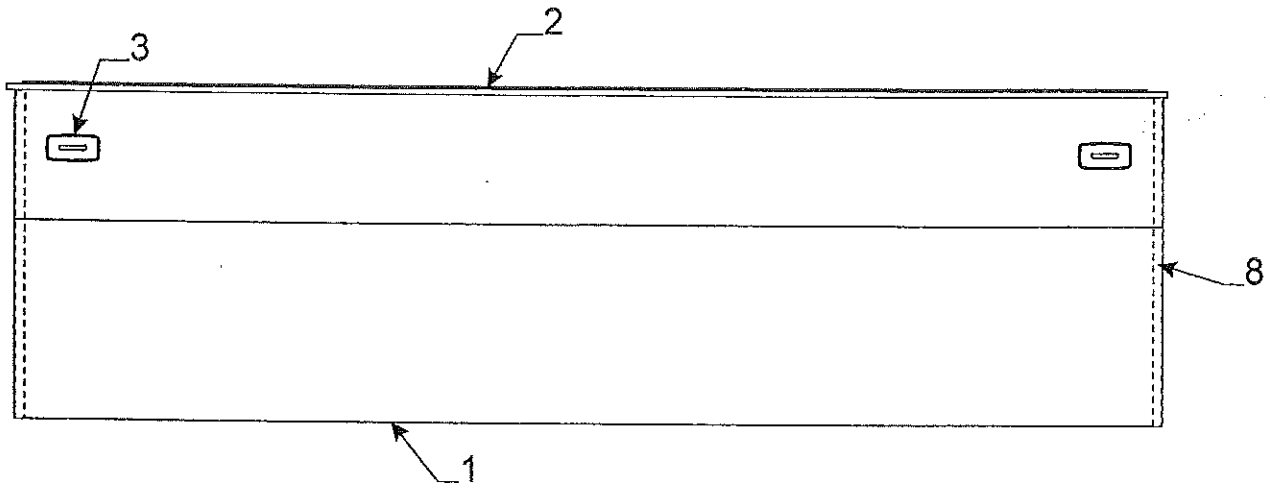


* 1.50 Flat Rate Front Panel/2.50 Rear Panel

**Front & Rear Body Panel Components**

| Flat Rate | Code | Part # | Description |
|---|---|---|---|
| * | 1 | 4759-2061 | front body pnl. 3856,72,73 |
| 1.50 | | 4759A9091 | front body pnl. 3843 Tucson |
| .65 | | 4747F4531 | front body pnl. 3875 Taos |
| .75 | 2 | 4759B1951 | frt./rr end rail 3856,72,73 |
| .75 | | 4759A4931 | front end rail 3843, 3875 |
| | | 1203-8651 | rivet x5 m25 |
| .15 | 3 | 4714J08481 | amber marker light |
| .10 | | 4716A4571 | amber lens (lens only) |
| .25 | | 4733H1311 | socket & harness |
| | | 4747-2558 | expansion rivet m25 |
| .15 | 4 | 4714J08581 | red marker light |
| .10 | | 4716A4561 | red lens (lens only) |
| | | **Note: refer to code # 3 for hardware** | |
| * | 5 | 4759A2071 | rear body pnl. 3856,72,73 |
| .85 | | 4759A9101 | rear body pnl. 3843 Tucson |
| .85 | | 4747H4641 | rear body pnl. 3875 Taos |
| | | 4741D96568 | expansion rivet m25 "white" |

| Flat Rate | Code | Part # | Description |
|---|---|---|---|
| .75 | 6 | 4759B1951 | frt./rr end rail 3856,72,73 |
| .75 | | 4759A4931 | rear end rail 3843, 75 |
| .20 | 7 | 4765-3511 | taillight w/license brkt's |
| .20 | 7A | 4749B4321 | taillight |
| .10 | | 4716A1061 | taillight lens |
| | | 4747-2558 | expansion rivet m25 |
| | 8 | 4060000023P | d-seal pkg. (5' pc.) |
| | 9 | 1032B24248 | bolt x2 |
| | | 1202B0468 | washer x6 m10 |
| | | 1202B1068 | washer x2 |
| | | 1201B6068 | nut x2 |
| .05 | 10 | 4769-6521 | spare tire mount |
| .30 | 11 | 4767A0421 | bumper 3843, 3875 |
| .30 | | 4759-2261 | bumper 3856,72,73 |
| .10 | 12 | 4733-2741 | 2" snap bushing |
| .10 | 13 | 4730H3188 | "open" decal |

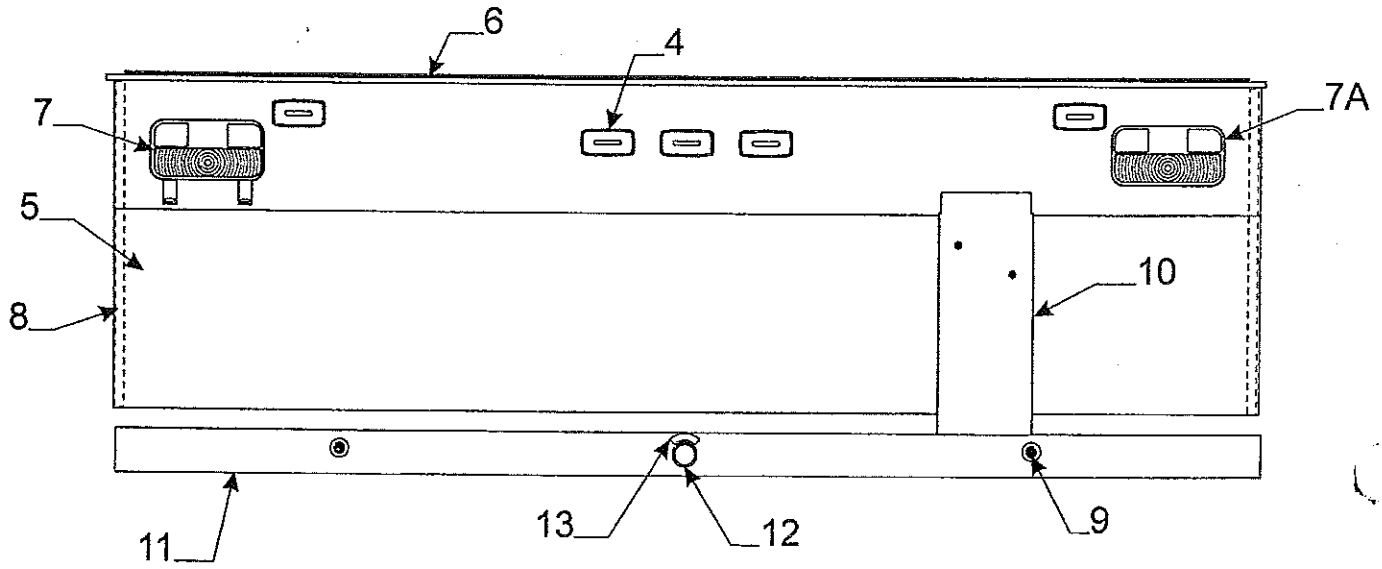

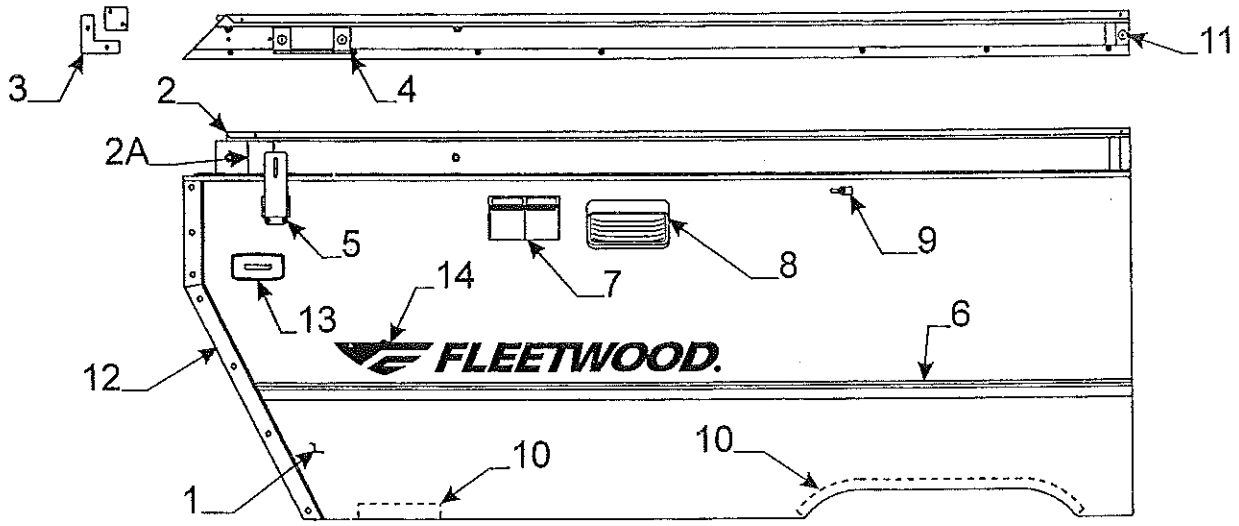


**4716M8251 Curbside Trim Tape/Hardware Kit**

| Flat Rate | Code | Part # | Description | Flat Rate | Code | Part # | Description |
|---|---|---|---|---|---|---|---|
| | | | **Curbside Right Rear Body Pnl. & Components** | | | | |
| 1.00 | 1 | 4759A9131 | csr body panel 3843 Tucson | .25 | 7 | 4746A3861 | duplex cover & outlet |
| 1.00 | | 4716B9751 | csr body panel 3875 Taos | .35 | | 4746-3871 | duplex box |
| 1.00 | | 4759A2051 | csr body panel 3856 Yuma | | | 1203-8678 | rivet m25 |
| 1.00 | | 4759A3261 | csr body panel 3872, 3873 | .25 | 8 | 4752-9921 | porch light |
| 1.00 | 2 | 4749D9761 | csr body rail 3843, 3875 | .10 | | 4716-5511 | porch light lens "amber" |
| 1.00 | | 4759-2021 | csr body rail 3856 Yuma | .15 | 9 | 4738-3941 | turn button & rivet |
| 1.00 | | 4759-3301 | csr body rail 3872, 3873 | | 10 | 4060050008P | foam tape pkg. (12' pc.) |
| .10 | 2A | 4716-2771 | vel-stick body rail pkg. | | 11 | 1203-8831 | rivet m25 |
| .15 | 3 | 4716-7061 | miter cover pkg. m4 | .30 | 12 | 4767-0121 | csr corner trim |
| .25 | 4 | 4734C4121 | lift trim pkg. m4 | | | 4745-3968 | screw "white" x7 |
| | | 4733-3398 | nylon flange bushing x2 | .15 | 13 | 4714J08581 | red marker light |
| .15 | 5 | 4741C6041 | top latch w/out lock tab | .10 | | 4716A4561 | red lens (lens only) |
| | | 4749-4848 | foam pad | .25 | 14 | 4761-1958 | fleetwood decal |
| .50 | 6 | 4716M8251 | trim tape & hardware kit | | | | |

**Note:** Refer above for miter covers and lift trim

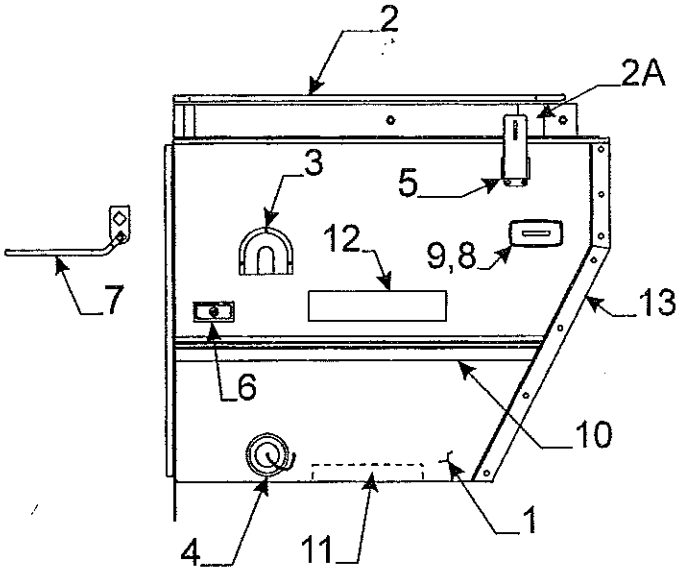


**4716M8251 Curbside Trim Tape/Hardware Kit**

| Flat Rate | Code | Part # | Description |
|---|---|---|---|
| | | | **Curbside Right Front Body Pnl. & Components** |
| .85 | 1 | 4759A9121 | csf body panel 3843 Tucson |
| .85 | | 4716C0441 | csf body panel 3875 Taos |
| .85 | | 4759A2041 | csf body panel 3856 Yuma |
| .85 | | 4759A3251 | csf body panel 3872, 3873 |
| 1.00 | 2 | 4747C0561 | csf body rail 3843, 3875 |
| 1.00 | | 4759-2011 | csf body rail 3856 Yuma |
| 1.00 | | 4759-3291 | csf body rail 3872, 3873 |
| .10 | 2A | 4716-2771 | vel-stick body rail pkg. |
| .15 | 3 | 4757-9261 | vent cover "plastic" |
| .25 | 4 | 4714A2861 | cap & strap |
| .15 | 5 | 4741C6041 | top latch w/out lock tab |
| 1.00 | 6 | 4730C3111 | lock handle (with key) |
| 1.00 | 7 | 4754-1691 | latch, strike & lever |
| .15 | 8 | 4714J08481 | amber marker light |
| .10 | 9 | 4716A4571 | amber lens (lens only) |
| .50 | 10 | 4716M8251 | trim tape & hardware kit |
| | 11 | 4060050008P | foam tape pkg.(12' pc.) |
| .25 | 12 | 4759-9148 | Tucson name decal 3843 |
| .25 | | 4749L3198 | Taos name decal 3875 |
| .25 | | 4759-2138 | Yuma name decal 3856 |
| .25 | | 4759-3318 | Cortez name decal 3872 |
| .25 | | 4759-4198 | Pecos name decal 3873 |
| .30 | 13 | 4767-0131 | csf corner trim |
| | | 4745-3968 | screw "white" x7 |

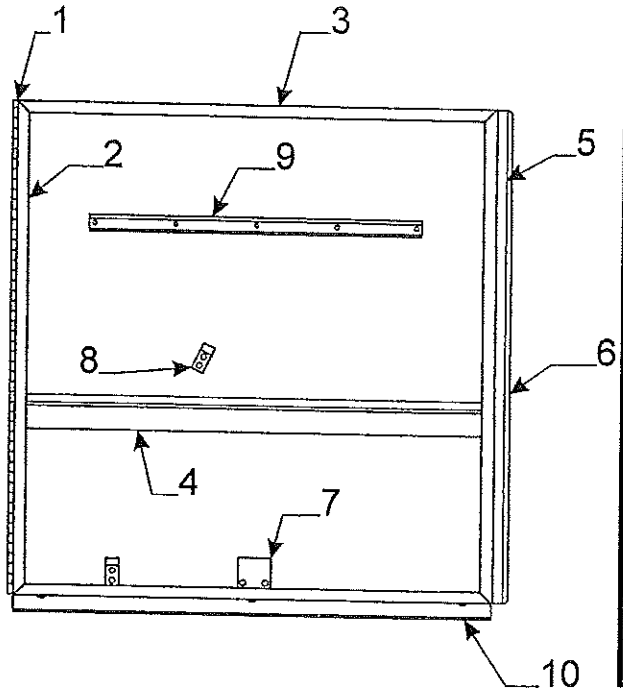


**4754J5111 Access Door Assy. (All except Taos) F.R. .50**
**4749N6471 Access Door Assy. 3875 Taos F.R. .50**
**Note: Access Door less trim tape (must order separately)**

| Flat Rate | Code | Part # | Description |
|---|---|---|---|
| | | | **Access Door Assembly Components** |
| .25 | 1 | 4754C0281 | door hinge (all except Taos) |
| .25 | | 4747B3621 | door hinge 3875 Taos |
| .35 | 2 | 4754A0251 | door frame (all except Taos) |
| .35 | | 4747A3591 | door frame 3875 Taos |
| .25 | 3 | 4749C9821 | door cap (all) |
| .25 | 4 | 4350002038P | trim tape pkg. (16' pc.) |
| .20 | 5 | 4060000023P | d-seal pkg. (5' pc.) |
| .25 | 6 | 4754E0261 | door frame (all except Taos) |
| .25 | | 4747A3601 | door frame 3875 |
| .10 | 7 | 4749A9941 | stove leg bracket 3875 |
| .10 | 8 | 4720A0721 | cooler clip m2 |
| | | 4745-3968 | screw x2 |
| .25 | 9 | 4750A8481 | stove support brkt. |
| | | 4716-081 | screw x2 |
| .10 | | 4720A0721 | cooler clip m2 3875 |
| .25 | 10 | 4747C3611 | bottom trim (all) |

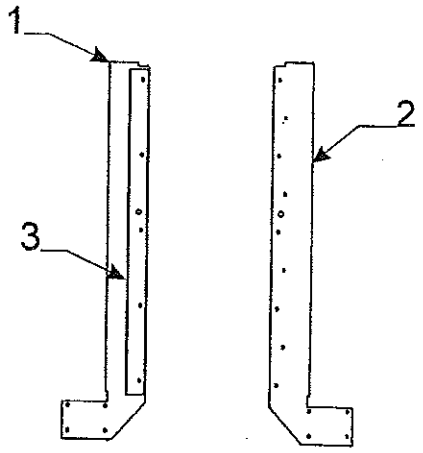


| Flat Rate | Code | Part # | Description |
|---|---|---|---|
| | | | **Door Bulkhead Components** |
| 1.25 | 1 | 4754A6201 | csr door bulkhead (all except Taos) |
| 1.25 | | 4747A0101 | csr door bulkhead 3875 Taos |
| 1.25 | 2 | 4754A6191 | csf door bulkhead (all except Taos) |
| .25 | | 4747A0091 | csf door bulkhead 3875 Taos |
| .35 | 3 | 4754A2111 | door seal angle (all except Taos) |
| .25 | | 4749B3881 | door seal angle 3875 Taos |
| | | 4733G0601 | rivet m25 "black" |

| Flat Rate | Code | Part # | Description |
|---|---|---|---|
| | | | **Step Components** |
| .50 | 1 | 4747A9741 | step |
| | 2 | 4750-3361 | step shim x2 |
| | 3 | 1200B3048 | bolt x6 |
| | | 1201B6068 | nut x6 |

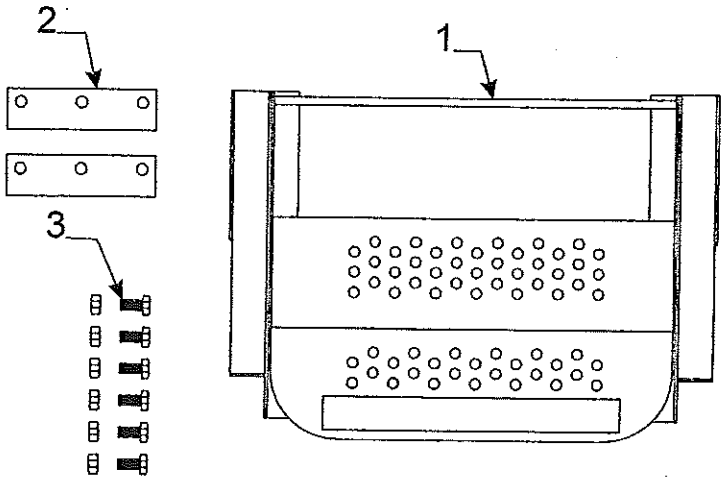

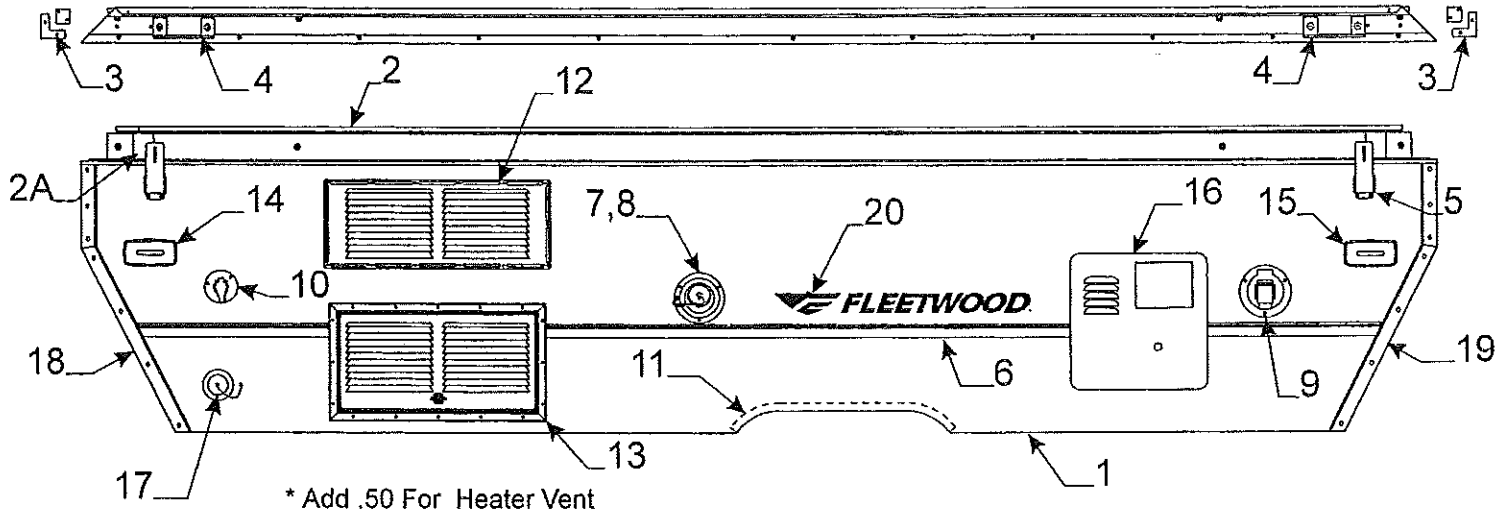


* Add .50 For Heater Vent
* Add 1.00 For Refrigerator
* Add .50 For Hot Water Heater

4716M8261 Roadside Trim Tape/Hardware Kit

**Roadside Left Body Panel & Components**

| Flat Rate | Code | Part # | Description |
|---|---|---|---|
| *1.00 | 1 | 4759B9111 | left side body pnl. 3843 Tucson |
| *1.00 | | 4716B98071 | left side body pnl. 3875 Taos |
| *1.00 | | 4759B2031 | left side body pnl. 3856 Yuma |
| *2.00 | | 4759A3271 | left side body pnl. 3872 Cortez |
| *2.00 | | 4759A4171 | left side body pnl. 3873 Pecos |
| 3.00 | 2 | 4747C0581 | left side body rail 3843, 3875 |
| 3.00 | | 4759-2001 | left side body rail 3856 Yuma |
| 3.00 | | 4759A3281 | left side body rail 3872 Cortez, 3873 Pecos |
| | | 4757-0731 | wire grommet & nut |
| .10 | 2A | 4716-2771 | vel-stick body rail pkg. |
| .15 | 3 | 4716-7061 | inner/outer miter cover pkg. m4 |
| .25 | 4 | 4734C4121 | lift trim, rivets & gasket pkg. m4 |
| .15 | 5 | 4741C6041 | top latch w/lock tab |
| | | 4749-4848 | foam pad |
| .50 | 6 | 4716M8261 | trim tape & hardware kit |
| .30 | 7 | 4731D1711 | water tank spout |
| | 8 | 4741-3508 | hex head tek screw x3 |
| .15 | 9 | 4733B23361 | cable hatch |
| .30 | 10 | 4732F1521 | city fill |
| | 11 | 4060050008P | 1/2" x 1" foam tape pkg. (12' pc.) |
| .50 | 12 | 4747D8321 | refrigerator vent "upper" |
| | | 4745-3968 | painted screw arctic wht. x4 per vent |
| .50 | 13 | 4747D8331 | refrigerator vent hinged "lower" |
| .15 | 14 | 4714J08481 | amber marker light x4 |
| .10 | | 4716A4571 | amber lens (lens only) |
| .25 | | 4733H1311 | socket & harness |
| | | 4747-2558 | expansion rivet m25 |
| .15 | 15 | 4714J08581 | red marker light |
| .10 | | 4716A4561 | red lens (lens only) |
| .25 | 16 | 4716-1331 | water heater door |
| .10 | 17 | 4714A2861 | drain cap & strap |
| .30 | 18 | 4767-0121 | rsf body corner trim |
| .30 | 19 | 4767-0131 | rsr body corner trim |
| .25 | 20 | 4761-1958 | fleetwood decal |

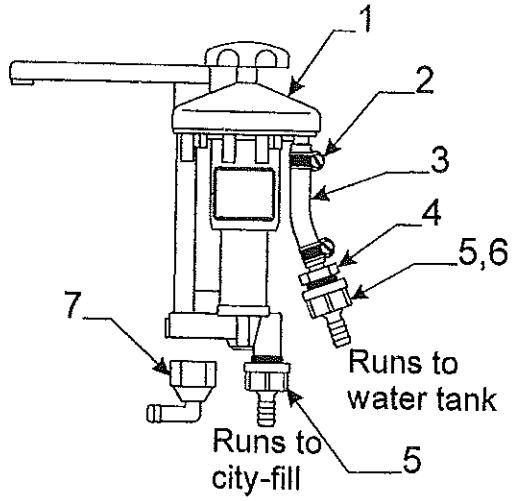


| Flat Rate | Code | Part # | Description |
|---|---|---|---|
| | | | **Hand pump & related parts** |
| .40 | 1 | 4734D0161 | hand pump |
| | | 4716-081 | screw x4 |
| | 2 | 4731-3058 | adjustable hose clamp |
| .35 | 3 | 4714-038 | 3/8" h.p. Hose (sold/foot) |
| .20 | 4 | 4732-4561 | male adapter |
| .20 | 5 | 4741A9561 | barbed adapter |
| .20 | 6 | 4754-4418 | round filter screen |
| .20 | 7 | 4741B9061 | street elbow |

TO ORDER REPAIR PARTS
FOR MODEL # 150-000-00 SHURFLO PUMP
CALL: 1/800-854-3218 GARDEN GROVE, CA.
CALL: 1/800-762-8094 ELKHART, IN.

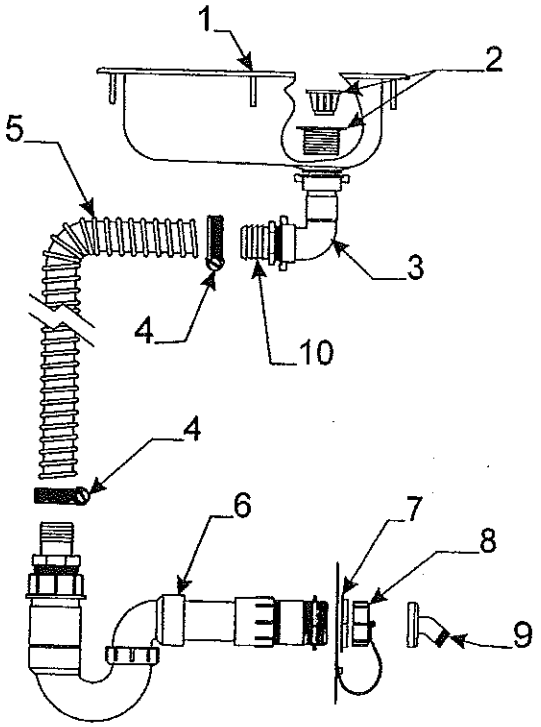


| Flat Rate | Code | Part # | Description |
|---|---|---|---|
| | | | **Sink & Component parts** |
| .30 | 1 | 4710F0301 | sink "stainless" |
| .05 | 2 | 4714C0661 | crumb cup "only" (wht. threaded) |
| .25 | | 4730E3151 | crumb cup & basket |
| .40 | 3 | 4757-0861 | elbow pkg. |
| | **Note: pkg. includes elbow, washer, nut and adapter** | | |
| | | 4757-9131 | 1 1/4" rubber washer |
| | 4 | 4715-4501 | 1 1/4" hose clamp |
| .80 | 5 | 4060012503P | 1 1/4" drain hose pkg. (10' pc.) |
| | **Note: must cut hose to length** | | |
| .75 | 6 | 4758C5431 | drain trap assy. 3875 |
| .75 | | 4759B5411 | drain trap assy. 3856, 72 |
| .75 | | 4769-6941 | drain trap assy. 3873, 3843 |
| | 7 | 4757-0921 | 1 1/2" metal nut "white" |
| .10 | 8 | 4714A2861 | cap & strap |
| | 9 | 4737-9138 | drain adapter |
| .40 | 10 | 4757A0871 | adaptor 1 1/4" barb |

4733D6701 auto extension

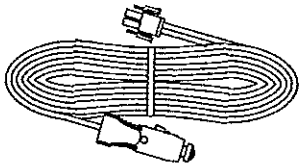

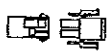

4716A4701 12 volt cap & plug m2

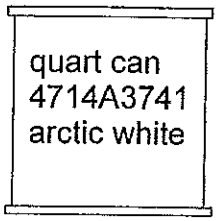


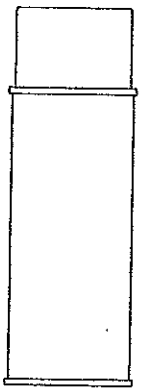

16 oz. spray
0008-2561 arctic white
0008-2571 black
0008-2641 black textured
0008-2631 russian maple

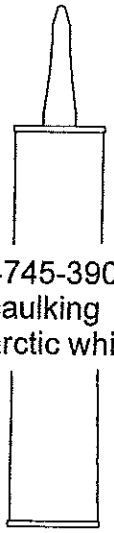

4745-3908
caulking
arctic white

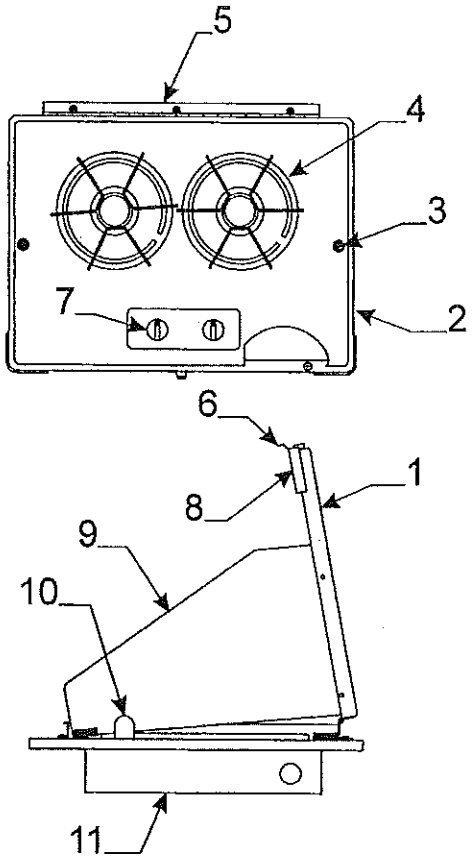


| Flat Rate | Code | Part # | Description |
|---|---|---|---|
| | | | Stove Component Parts (Upper Galley Assy.'s) |
| .15 | 1 | 4749F6601 | stove cover assy. |
| .15 | 2 | 4746B9491 | 2 burner cook top "white" |
| .05 | 3 | 4716-2631 | stove top screw/washer m2 |
| .05 | 4 | 4752A9881 | stove grate x3 |
| .10 | 5 | 4716-2671 | stove cover hinge |
| .15 | 6 | 4733-4018 | stove cover latch |
| .15 | | 4733-4028 | stove cover strike |
| .05 | 7 | 4716A1861 | knob |
| | 8 | 4732A2291 | edge molding m2 |
| .25 | 9 | 4716-2661 | stove fin "right" |
| .25 | | 4716-2651 | stove fin "left" |
| .15 | 10 | 4716-2641 | stove fin stay brkt. m2 |
| .75 | 11 | 4748D2581 | 2 burner stove box |

| Flat Rate | Code | Part # | Description |
|---|---|---|---|
| | | | **Dinette Table Assembly Components** |
| .50 | 1 | 4756B8461 | table top (30" x 39") (all) |
| .30 | 2 | 4060475001P | t-molding pkg. (14' pc.) |
| .50 | 3 | 4745J5271 | table leg package |
| | | | **Note: pkg. includes 2 legs & required mounting hardware** |
| .10 | 4 | 4751A9711 | strap & screw pkg. |
| .10 | 5 | 4752-0551 | white plastic cap m2 |
| .15 | 6 | 4720F1211 | table leg mounting brace m2 |
| | | 1103E1018 | 5/8" wood screw |
| .15 | 7 | 4752A0561 | table leg insert cap m2 |
| .25 | 8 | 4744-6971 | lock brace assy. x2 |
| | | 1103E1018 | 5/8" wood screw |
| .15 | 9 | 4756-8741 | table top plastic spacer m4 |
| | | 1103B08148 | 7/8" screw (x2 per spacer) |
| .05 | 10 | 4724D2631 | velcro fastener m4 |

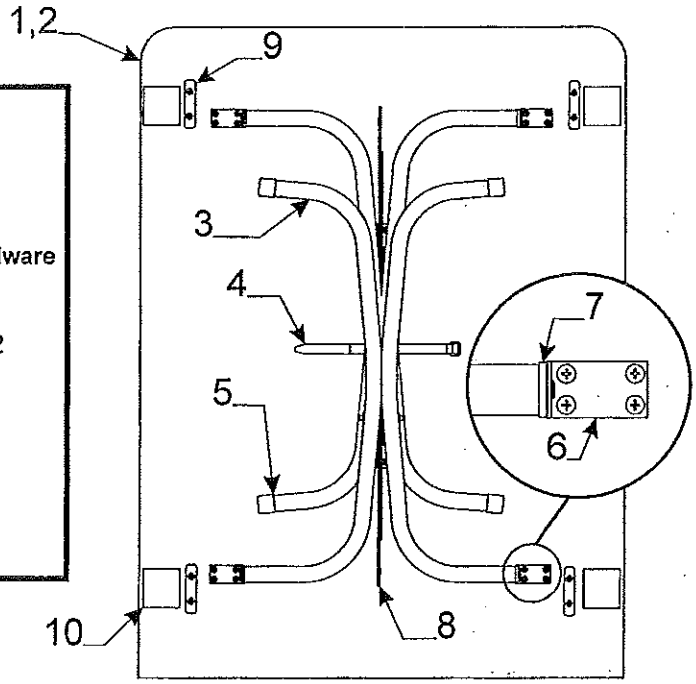

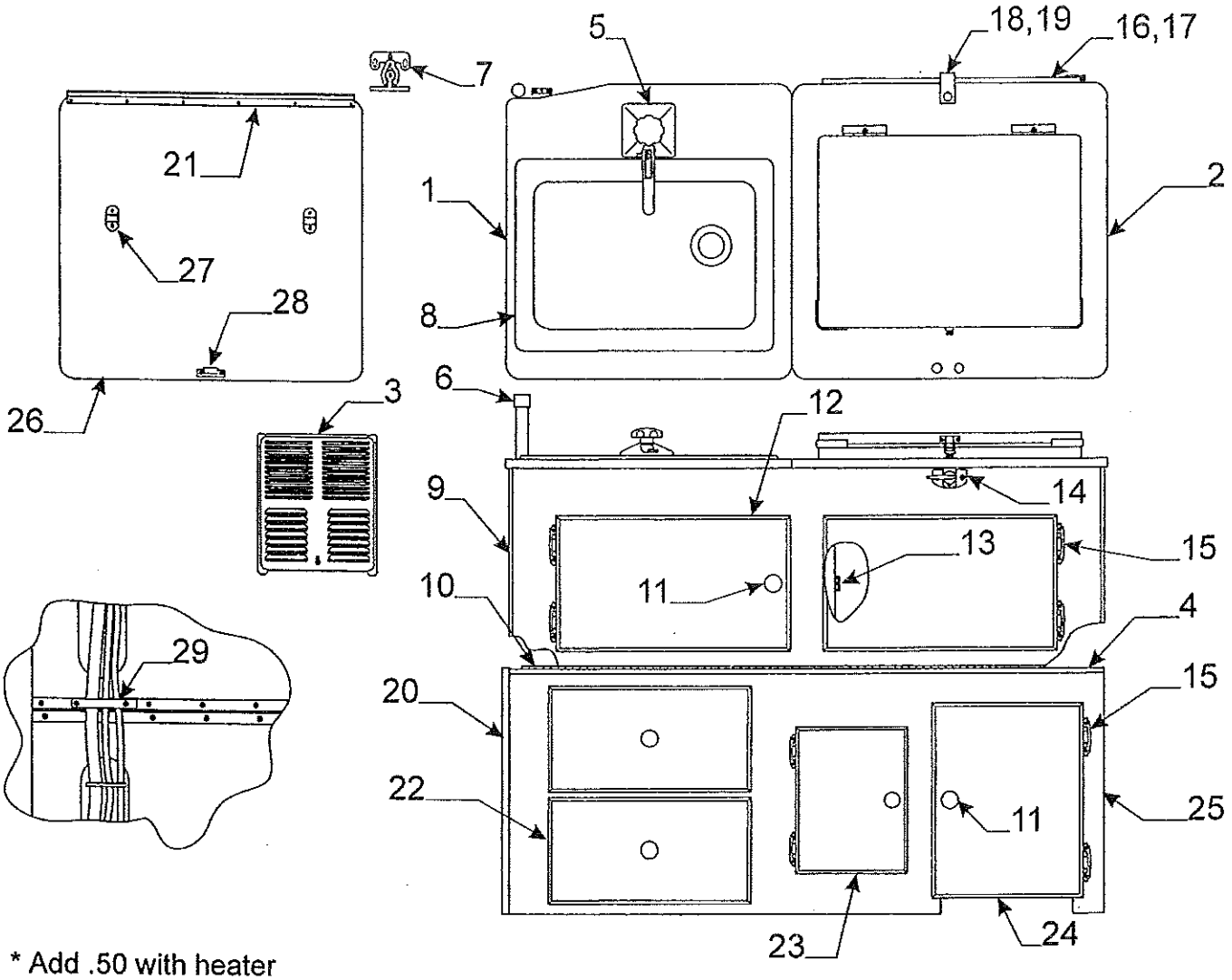


* Add .50 with heater

| Flat Rate | Code | Part # | Description |
|---|---|---|---|
| | | **Galley Assy. Components - 3875 Taos** | |
| 1.00 | 1 | 4757A8061 | upper galley top |
| .30 | | 4060475001P | t-molding pkg. (14' pc.) |
| | 2 | **Refer to opposite page for this item** | |
| .10 | 3 | 4743-3551 | furnace grill |
| 1.25 | 4 | *4747J4371 | lower galley top |
| | | 4716-9691 | hose strap pkg. |
| .20 | | 4746C0971 | kill switch m4 |
| .40 | 5 | 4734D0161 | hand pump "Shurflo" |
| .40 | | 4734E0161 | hand pump "Atwood" |
| | | 4741A9551 | check valve (Atwood only) |
| | | 4741A9561 | female copper adapter |
| | | 4716-081 | screw x4 |
| | **Note: refer to page 10 for pump components** | | |
| .25 | 6 | 4758-8201 | galley pole |
| | | 4752-0551 | plastic cap m2 |
| .15 | 7 | 4744A9261 | knuckle latch m4 |
| | | 4738-3088 | screw x2 |
| .30 | 8 | 4710F0301 | sink |
| | **Note: refer to page 10 for sink components** | | |
| .65 | 9 | 4716D0151 | 3/8" f-channel 24" pc. |
| .50 | 10 | 4757-2621 | hinge |
| .10 | 11 | 4748A3951 | door pull (includes screw) |

| Flat Rate | Code | Part # | Description |
|---|---|---|---|
| .15 | 12 | 4754B1481 | dr. pnl x2 - 9 1/4" x 15 3/4" |
| .15 | 13 | 4733-6391 | latch & strike pkg. |
| .20 | 14 | 4754-0501 | latch |
| .10 | 15 | 4739B0518 | hinge |
| .10 | | 4745C26188 | hinge (spring loaded) |
| .25 | 16 | 4750A8481 | stove support |
| .35 | 17 | 4754-0461 | stove support brkt. |
| .15 | 18 | 4723B5061 | safety strap |
| .05 | 19 | 4730A3548 | stud w/screw |
| .35 | 20 | 4749J9891 | seat end |
| .30 | | 4060400091P | t-molding (12' pc. Pkg) |
| .15 | 21 | 4754-0471 | hanger bracket |
| .15 | 22 | 4758G5691 | drawer assy. x2 |
| .15 | | 4758-3171 | drawer frt. 14 3/4" x 7 1/2" |
| .15 | 23 | 4758-4041 | door panel 12" x 9 1/8" |
| .15 | 24 | 4754B1461 | door panel 14" x 10 3/4" |
| 1.50 | 25 | *4749L9901 | galley front |
| .10 | 26 | 4754D5391 | cutting board assy. |
| .10 | 27 | 4740A1891 | support leg brkt. m2 |
| .10 | 28 | 4754A08861 | latch strike |
| .10 | 29 | 4716-9691 | hose strap pkg. |

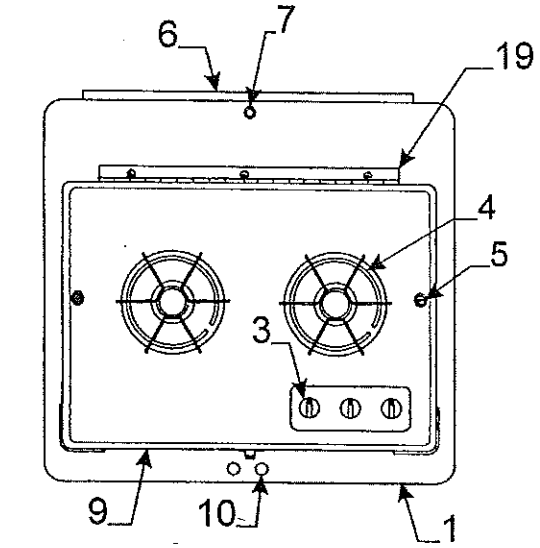


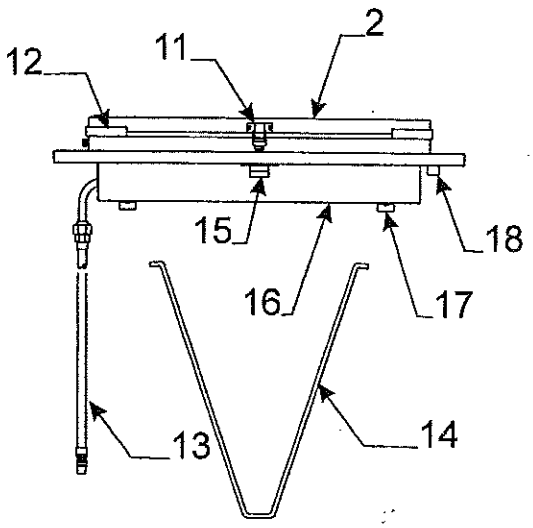


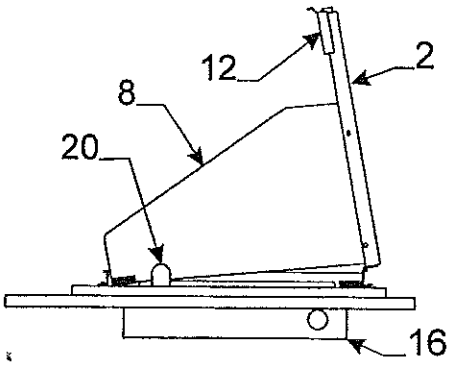


| Flat Rate | Code | Part # | Description |
|---|---|---|---|
| | | **lift-out Stove Component Parts - 3875 Taos** | |
| .60 | 1 | 4754E0451 | counter top |
| .30 | | 4060475001P | t-molding pkg. (14' pc.) |
| .15 | 2 | 4749F6601 | stove cover assy. |
| .05 | 3 | 4716A1861 | stove knob |
| .05 | 4 | 4752A9881 | stove grate |
| .05 | 5 | 4716-2631 | stove top screw/washer m2 |
| .35 | 6 | 4754-0471 | stove hanger bracket |
| .05 | 7 | 4730A3548 | stud w/screw |
| .25 | 8 | 4716-2661 | stove fin "right" |
| .25 | | 4716-2651 | stove fin "left" |
| .15 | 9 | 4746B9491 | cook top 2 burner |
| | 10 | 4739E2908 | screw cap m10 |
| | | 4739-2918 | screw cap washer m10 |
| .15 | 11 | 4733-4018 | stove cover latch |
| | | 1203-8558 | rivet m25 (x2 per latch) |
| .15 | | 4733-4028 | strike |
| | | 4737-8478 | screw |
| .05 | 12 | 4732A2291 | edge molding m2 |
| .25 | 13 | 4716-7131 | 48" gas hose pkg. |
| **Note: Pkg. consist of (1) hose, inside & outside quick disconnect** | | | |
| .05 | 14 | 4748-2731 | support leg (all) |
| .15 | 15 | 4754A08861 | latch strike |
| .75 | 16 | 4748D2581 | stove box (2 burner) |
| .20 | 17 | 4740A1891 | support leg brkt. w/rivets m2 |
| .05 | 18 | 4724-2608 | stop button |
| .10 | 19 | 4716-2671 | stove cover hinge |
| .15 | 20 | 4716-2641 | stove fin stay brkt. m2 |

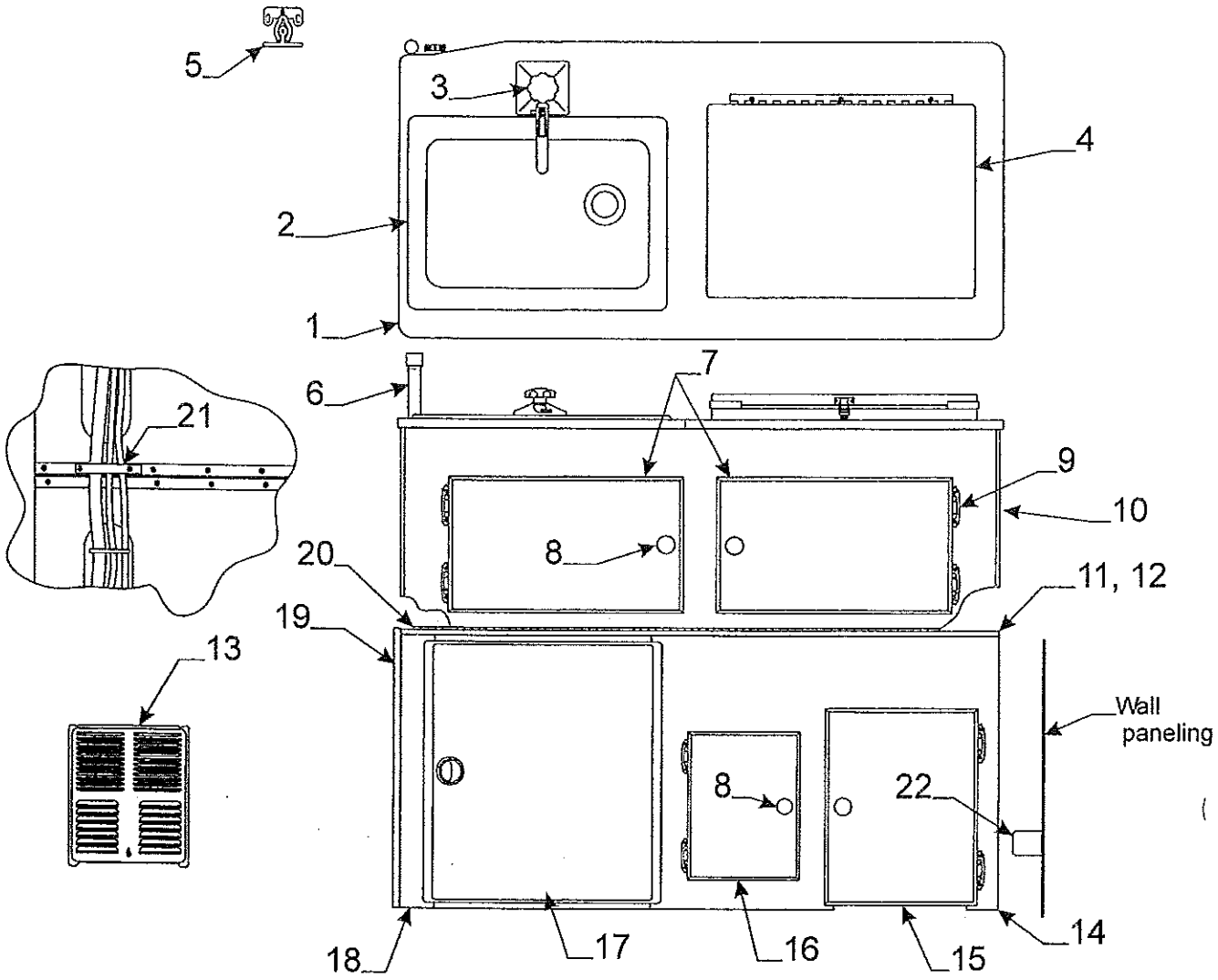


* Add .50 with heater

**Upper & Lower Galley Assy. Components - 3843 Tucson**

| Flat Rate | Code | Part # | Description | Flat Rate | Code | Part # | Description |
|---|---|---|---|---|---|---|---|
| 1.00 | 1 | 4759-9231 | upper galley top (sink on lt. side) | .65 | 10 | 4716D0151 | 3/8" f-channel 24" pc. |
| 1.00 | | 4759A9231 | upper galley top (sink on rt. side) | 1.25 | 11 | 4759A9271 | lower galley top |
| .30 | | 4060475001P | t-molding pkg. (14' pc.) | .20 | | 4746C0971 | kill switch m4 |
| .30 | 2 | 4710F0301 | sink | .20 | 12 | 4733C4981 | rocker switch (elec. pump) |
| | | **Note: refer to page 10 for sink components** | | .10 | 13 | 4743-3551 | furnace grill |
| .40 | 3 | 4734D0161 | hand pump | 1.50 | 14 | *4759-9291 | lower galley frt. (rt.) |
| | | **Note: refer to page 10 for pump components** | | .15 | 15 | 4759-9311 | door panel 10 1/4" x 14" |
| | 4 | **Note: refer to page 11 for stove components** | | .15 | | 4733-6391 | latch & strike pkg. |
| .15 | 5 | 4744A9261 | knuckle latch m4 | .15 | 16 | 4758-4041 | door panel 12" x 9 1/8" |
| | | 4738-3088 | screw x2 | .25 | 17 | 4754A0481 | built-in cooler |
| .25 | 6 | 4759-9201 | galley rest pole | .75 | 18 | 4759-9301 | lower galley frt. (lt.) |
| | | 4752-0551 | plastic cap m2 | .75 | 19 | 4759-9281 | lower galley gazoodi |
| .15 | 7 | 4754B1481 | door panel - 15 3/4" x 9 1/4" | .50 | 20 | 4747A9671 | hinge |
| .15 | | 4733-6391 | latch & strike pkg. | | 21 | 4716-9691 | hose strap pkg. |
| .10 | 8 | 4748A3951 | door pull (includes screw) | .25 | 22 | 4754B0901 | galley rest (plastic) |
| .10 | 9 | 4739B0518 | hinge | | | | |
| .10 | | 4745C26188 | hinge (spring loaded) | | | | |

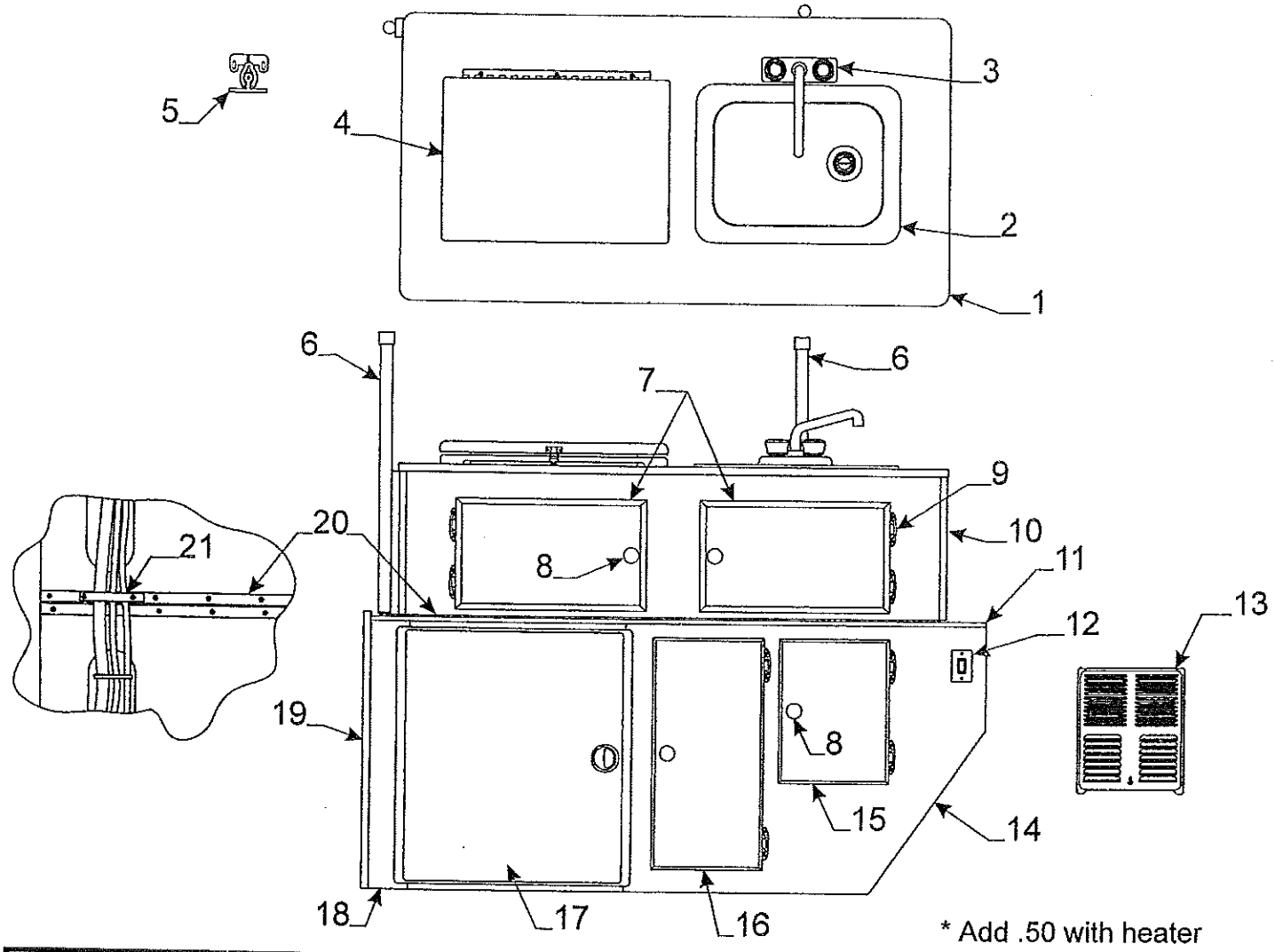


* Add .50 with heater

**Upper & Lower Galley Assy. Components - 3856 Yuma**

| Flat Rate | Code | Part # | Description |
|---|---|---|---|
| 1.00 | 1 | 4759C3331 | upper galley top |
| .30 | | 4060475001P | t-molding pkg. (14' pc.) |
| .30 | 2 | 4710F0301 | sink |
| | | **Note: refer to page 10 for sink components** | |
| .40 | 3 | 4745E2741 | mixer faucet |
| | | 4758-8508 | dual faucet use decal |
| | 4 | **Note: refer to page 11 for stove components** | |
| .15 | 5 | 4744A9261 | knuckle latch m4 |
| | | 4738-3088 | screw x2 |
| .25 | 6 | 4757A2991 | galley rest pole |
| | | 4752-0551 | plastic cap m2 |
| .15 | 7 | 4754B1481 | door panel - 15 3/4" x 9 1/4" |
| .15 | | 4733-6391 | latch & strike pkg. |
| .10 | 8 | 4748A3951 | door pull (includes screw) |
| .10 | 9 | 4739B0518 | hinge |
| .10 | | 4745C26188 | hinge (spring loaded) |

| Flat Rate | Code | Part # | Description |
|---|---|---|---|
| .65 | 10 | 4716D0151 | 3/8" f-channel 24" pc. |
| 1.25 | 11 | 4759B2611 | lower galley top |
| .20 | | 4746C0971 | kill switch m4 |
| .20 | 12 | 4733C4981 | rocker switch (elec. pump) |
| .10 | 13 | 4743-3551 | furnace grill |
| 1.50 | 14 | *4759C2641 | lower galley frt. (rt.) |
| .15 | 15 | 4758-4041 | door panel 12" x 9 1/8" |
| .15 | | 4733-6391 | latch & strike pkg. |
| .15 | 16 | 4759-3411 | door panel 19 1/4" x 9 1/4" |
| .25 | 17 | 4754A0481 | built-in cooler |
| .75 | 18 | 4759A4051 | lower galley frt. (lt.) |
| .75 | 19 | 4759A4111 | lower galley seat gazoodi |
| .50 | 20 | 4757-2621 | hinge |
| | 21 | 4716-9691 | hose strap pkg. |

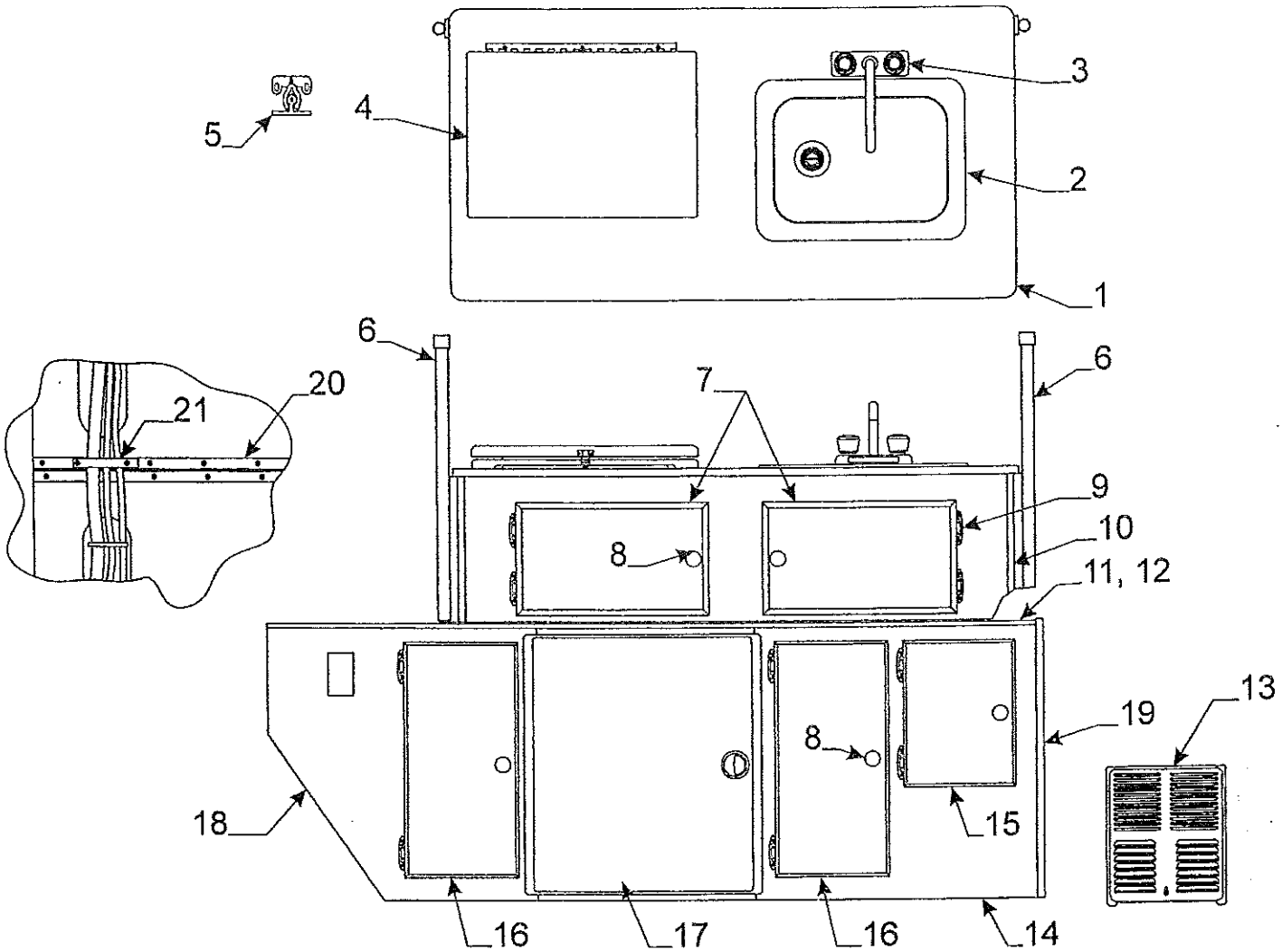


** DRAIN HOLE LOC. 15 3/4"
*** DRAIN HOLE LOC. 17 3/8"

**Upper & Lower Galley Assy. Components - 3872 Cortez**

| Flat Rate | Code | Part # | Description | Flat Rate | Code | Part # | Description |
|---|---|---|---|---|---|---|---|
| 1.00 | 1 | 4759D3331 | upper galley top | .65 | 10 | 4716D0151 | 3/8" f-channel 24" pc. |
| .30 | | 4060475001P | t-molding pkg. (14' pc.) | 1.25 | 11 | **4759-3451 | lower galley top |
| .30 | 2 | 4710F0301 | sink | 1.25 | | ***4759A3451 | lower galley top |
| | | **Note: refer to page 10 for sink components** | | .20 | | 4746C0971 | kill switch m4 |
| .40 | 3 | 4745E2741 | mixer faucet | .20 | 12 | 4733C4981 | rocker switch (elec. pump) |
| | | 4758-8508 | dual facet use decal | .10 | 13 | 4743-3551 | furnace grill |
| | 4 | **Note: refer to page 11 for stove components** | | 1.50 | 14 | *4759B3431 | lower galley frt. (rt.) |
| .15 | 5 | 4744A9261 | knuckle latch m4 | .15 | 15 | 4759-9311 | door panel 10 1/4" x 14" |
| | | 4738-3088 | screw x2 | .15 | | 4733-6391 | latch & strike pkg. |
| .25 | 6 | 4757A2991 | galley rest pole | .15 | 16 | 4759-3411 | door panel 19 1/4" x 9 1/4" |
| | | 4752-0551 | plastic cap m2 | .25 | 17 | 4754A0481 | built-in cooler |
| .15 | 7 | 4754B1481 | door panel - 15 3/4" x 9 1/4" | .75 | 18 | 4759B3441 | lower galley frt. (lt.) |
| .15 | | 4733-6391 | latch & strike pkg. | .75 | 19 | 4759A9851 | lower galley seat gazoodi |
| .10 | 8 | 4748A3951 | door pull (includes screw) | .50 | 20 | 4757-2621 | hinge |
| .10 | 9 | 4739B0518 | hinge | | 21 | 4716-9691 | hose strap pkg. |
| .10 | | 4745C26188 | hinge (spring loaded) | | | | |

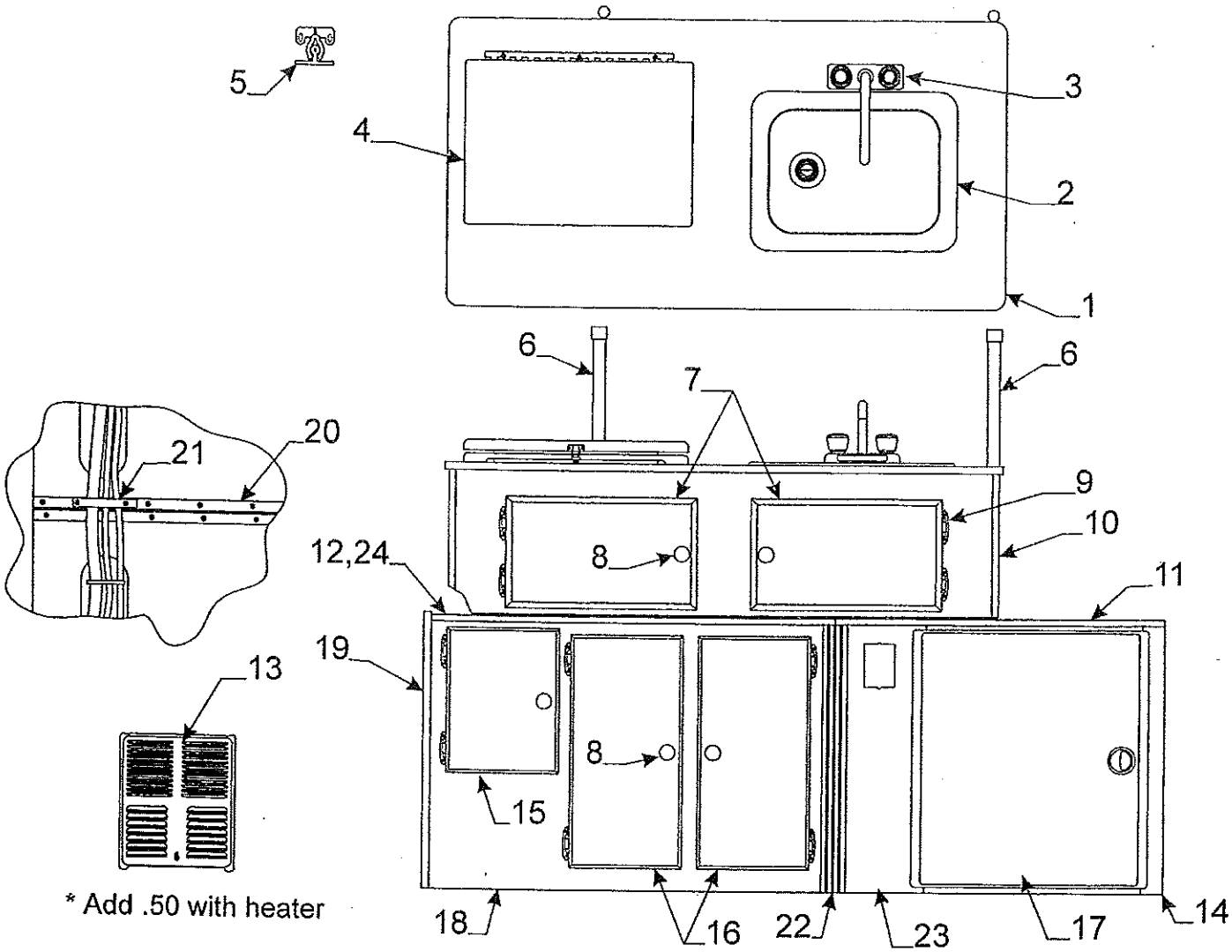


**Upper & Lower Galley Assy. Components - 3873 Pecos**

| Flat Rate | Code | Part # | Description |
|---|---|---|---|
| 1.00 | 1 | 4759C3331 | upper galley top |
| .30 | | 4060475001P | t-molding pkg. (14' pc.) |
| .30 | 2 | 4710F0301 | sink |
| | | **Note: refer to page 10 for sink components** | |
| .40 | 3 | 4745E2741 | mixer faucet |
| | | 4758-8508 | dual facet use decal |
| | 4 | **Note: refer to page 11 for stove components** | |
| .15 | 5 | 4744A9261 | knuckle latch m4 |
| | | 4738-3088 | screw x2 |
| .25 | 6 | 4757A2991 | galley rest pole |
| | | 4752-0551 | plastic cap m2 |
| .15 | 7 | 4754B1481 | door panel - 15 3/4" x 9 1/4" |
| .15 | | 4733-6391 | latch & strike pkg. |
| .10 | 8 | 4748A3951 | door pull (includes screw) |
| .10 | 9 | 4739B0518 | hinge |
| .10 | | 4745C26188 | hinge (spring loaded) |
| .65 | 10 | 4716D0151 | 3/8" f-channel 24" pc. |

| Flat Rate | Code | Part # | Description |
|---|---|---|---|
| 1.25 | 11 | 4759-4341 | lower galley top (rt.) |
| .20 | | 4746C0971 | kill switch m4 |
| .20 | 12 | 4733C4981 | rocker switch (elec. pump) |
| .10 | 13 | 4743-3551 | furnace grill |
| 1.50 | 14 | *4759-4301 | lower galley frt. (rt.) |
| .15 | 15 | 4758-4041 | door panel 12" x 9 1/8" |
| .15 | | 4733-6391 | latch & strike pkg. |
| .15 | 16 | 4759-3411 | door panel 19 1/4" x 9 1/4" |
| .25 | 17 | 4754A0481 | built-in cooler |
| .75 | 18 | 4759-4321 | lower galley frt. (lt.) |
| .75 | 19 | 4759-4241 | lower galley seat gazoodi |
| .50 | 20 | 4757-2621 | hinge |
| | 21 | 4716-9691 | hose strap pkg. |
| .25 | 22 | 4758-9131 | lower galley molding |
| .50 | 23 | 4759-4311 | lower galley frt. |
| 1.25 | 24 | 4759-4331 | lower galley top (lt) |

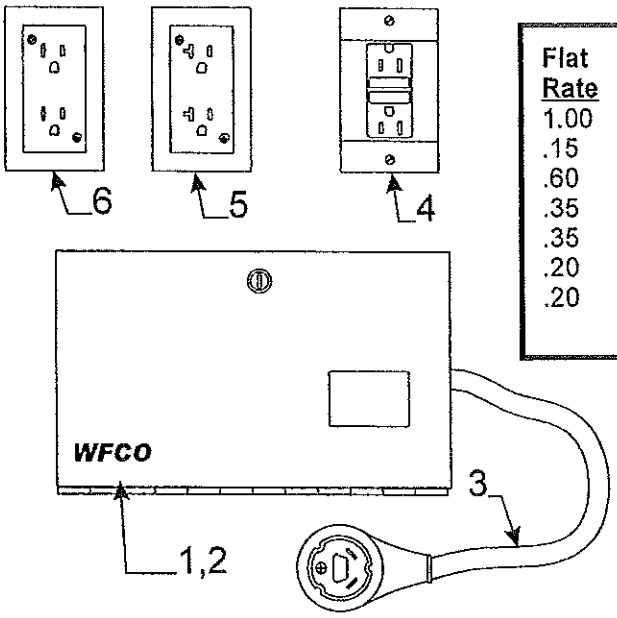


| Flat Rate | Code | Part # | Converter & Related Parts Description |
|---|---|---|---|
| 1.00 | 1 | 4753C8201 | converter 25 amp WFCO |
| .15 | 2 | 4716B1301 | converter face cover (plastic) |
| .60 | 3 | 4744A3101 | power cord 30 ft. |
| .35 | 4 | 4746B3841 | GFI receptacle w/cover (wht.) |
| .35 | | 4755-8321 | 20 amp GFI receptacle w/cover (wht.) |
| .20 | 5 | 4752-2371 | 20 amp receptacle w/cover (wht.) |
| .20 | 6 | 4752-2361 | 15 amp receptacle w/cover (wht.) |
| | 7 | 4746A3851 | receptacle box |

**WORLD FRIENDSHIP CO., LTD**
Warranty: 800-900-2468

| Flat Rate | Code | Part # | Curbside Corner Cabinet Components 3843,75,56,72 Description |
|---|---|---|---|
| .25 | 1 | 4759-9731 | csf cabinet top 3843 Tucson |
| .25 | | 4747E3321 | csf cabinet top 3875 Taos |
| .25 | | 4759-2531 | csf cabinet top 3856 Yuma |
| .25 | | 4759-3601 | csf cabinet top 3872 Cortez |
| .30 | | 4060462506P | t-molding pkg. (10' pc.) |
| .30 | 2 | 4759-9251 | cabinet side 3843 Tucson |
| .30 | | 4747F3351 | cabinet side 3875 Taos |
| .30 | | 4759B2541 | cabinet side 3856 Yuma |
| .30 | | 4759A3591 | cabinet side 3872 Cortez |
| .35 | 3 | 4716D0151 | 3/8" f-channel 24" pc. |
| .10 | 4 | 4745C26188 | hinge (spring loaded) |
| .15 | 5 | 4759-9221 | door pnl. 15 1/4" x 18" 3843 |
| .15 | | 4754B0711 | door pnl. 16" x 8" 3875 |
| .15 | | 4759-2581 | door pnl. 15 3/4" x 15 1/4" 3856 |
| .15 | | 4759-9631 | door pnl. 15 1/4" x 16 1/4" 3872 |
| .15 | | 4759-3411 | door pnl. 9 1/4" x 19 1/4" 3872 |
| .15 | | 4733-6391 | latch & strike pkg. |
| .10 | 6 | 4748A3951 | door pull (includes screw) |
| .50 | 7 | 4759-9261 | cabinet front 3843 Tucson |
| .50 | | 4747F3281 | cabinet front 3875 Taos |
| .50 | | 4759-2521 | cabinet front 3856 Yuma |
| .50 | | 4759-3581 | cabinet front 3872 Cortez |

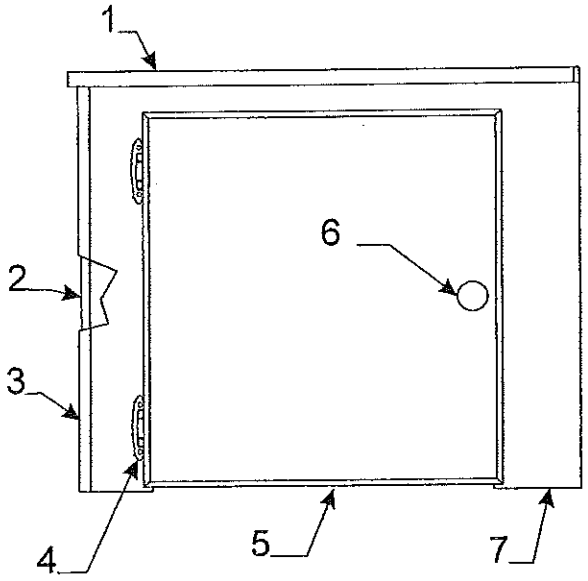


| Flat Rate | Code | Part # | Paneling & Trim (Must Cut To Size) Description |
|---|---|---|---|
| * | 1 | 4754E1361 | universal wall panel 48" x 23 13/16" |
| * | 2 | 4716C1321 | universal corner divider m2 48" pc. |
| * | 3 | 4716C1331 | universal panel divider m2 48" pc. |

* Prior Authorization Needed

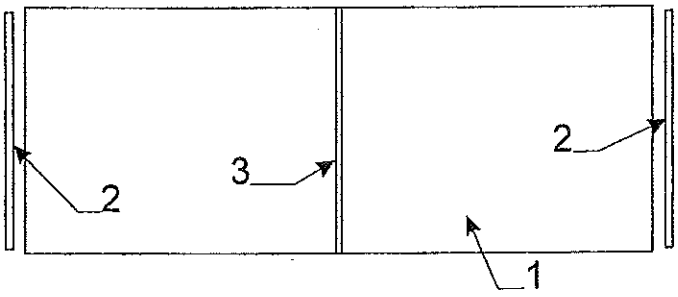

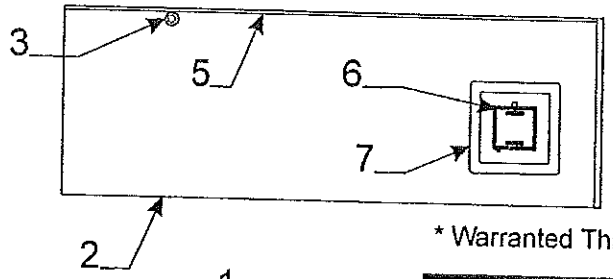


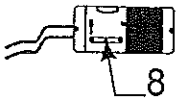


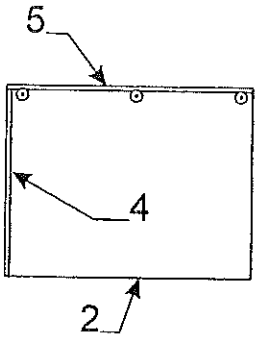


* Warranted Through Vendor

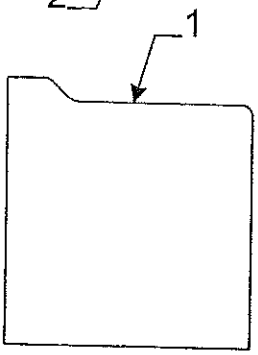


| Flat Rate | Code | Part # | Description |
|---|---|---|---|
| | | **Seat Bench Component Parts** | |
| .30 | 1 | 4759-9161 | seat end curbside bench 3843 |
| .30 | | 4749G9881 | seat end curbside bench 3875 |
| .30 | | 4759A4251 | seat end curbside bench 3873 |
| .30 | | 4759-9281 | seat end roadside bench 3843 |
| .30 | | 4749J9891 | seat end roadside bench 3875 |
| .30 | | 4759-4241 | seat end roadside bench 3873 |
| .30 | | 4060400091P | t-molding 5/8" lipped (12' pc. pkg.) |
| .50 | 2 | 4716B2721 | universal bench panel 14 1/2" x 48" |
| .50 | | 4716C2721 | universal bench panel. 15 11/16" 48" |
| | | **Note: seat bench ends must be cut to size where applicable** | |
| .05 | 3 | 4724-2608 | stop button |
| | | 1103B1012 | #10 - 3/4" screw |
| .35 | 4 | 4716B1421 | 5/32" f-channel 24" pc. |
| .50 | 5 | 4060015603P | 5/32" u-channel 48" pc. |
| * | 6 | 4752-8461 | thermostat |
| .20 | 7 | 4747-8391 | plastic base & bracket |
| .25 | 8 | 4753-9171 | LP gas detector |

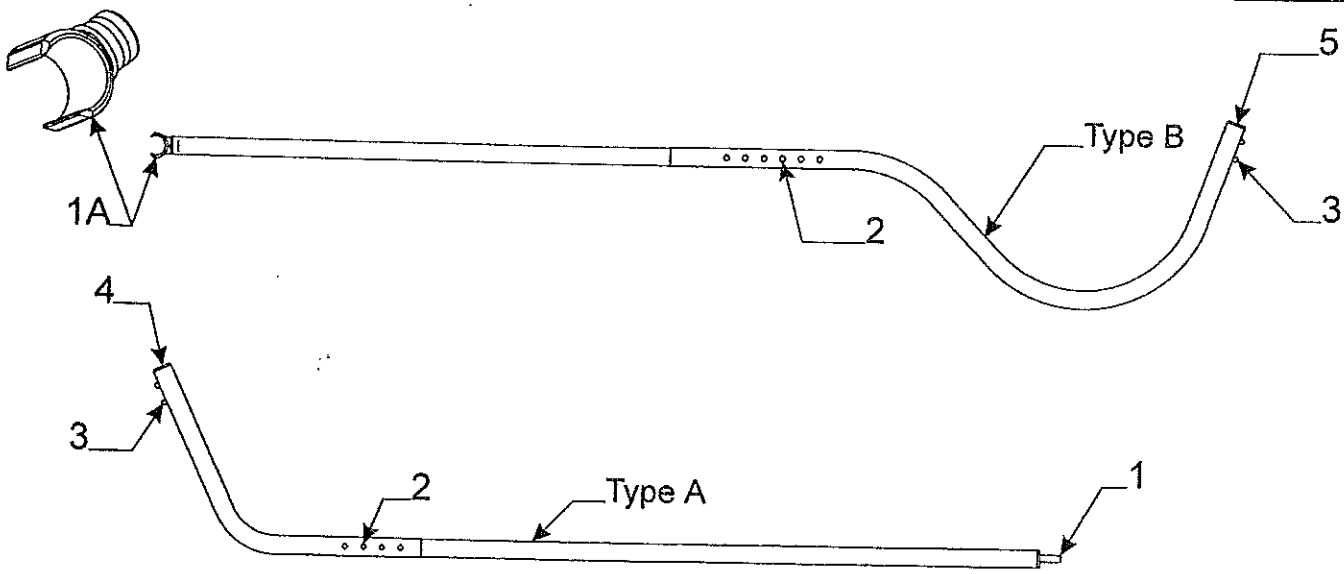


| Flat Rate | Code | Part # | Description |
|---|---|---|---|
| | | **Tent Support Components** | |
| .20 | 1 | 8470-1728 | pole pin "black" m10 |
| .20 | 1A | 4757-4301 | tent support clasp m10 |
| .10 | 2 | 4734-6708 | spring assy. |
| .10 | 3 | 4734A6708 | spring assy. |
| .10 | 4 | 4730B4648 | tube closure "white" |
| .10 | 5 | 4752A0561 | tube closure "black" m2 |

**Tent Support Assemblies (Complete)**
**Flat Rate .10 per Tent Support**

| Model | Type | Front Bed | Type | Rear Bed |
|---|---|---|---|---|
| 3843, 3875 | A | 4747B5731 | A | 4747B5731 |
| 3856 Yuma | B | 4769-5641 | B | 4759-6891 |
| 3872, 3873 | B | 4769-5641 | B | 4769-5641 |

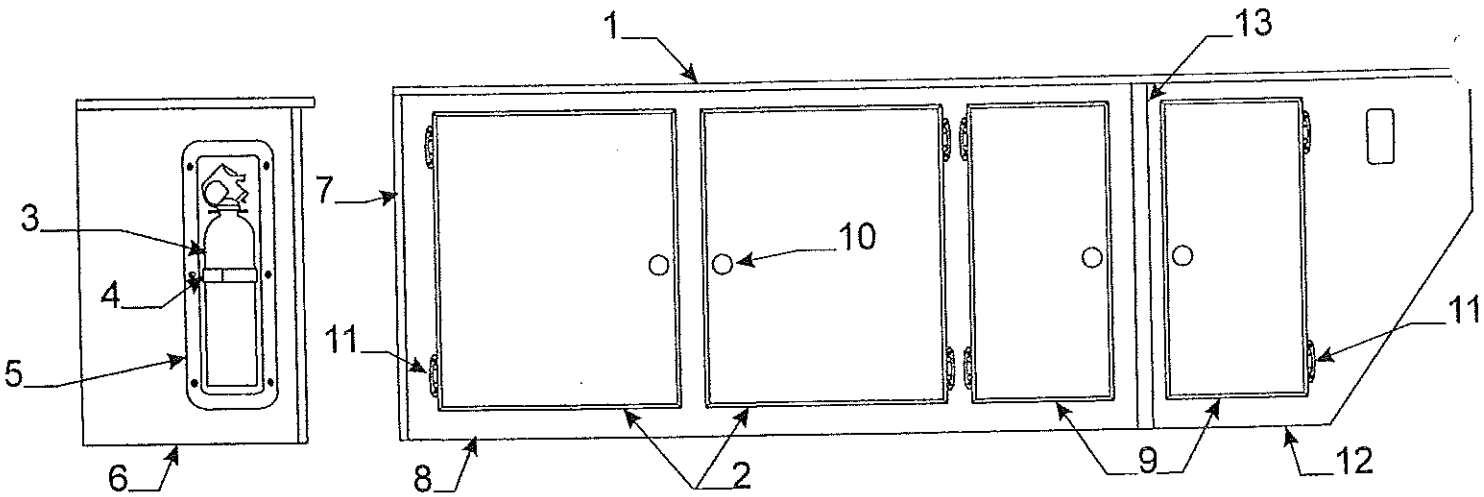


**Curbside Hutch Assy. 3856 Yuma, 3872 Cortez**

| Flat Rate | Code | Part # | Description | Flat Rate | Code | Part # | Description |
|---|---|---|---|---|---|---|---|
| .75 | 1 | 4759A3941 | hutch top 3856 | .65 | 7 | 4716D0151 | 3/8" f-channel 24" pc. |
| .75 | | 4759-3481 | hutch top 3872 | .50 | 8 | 4759A3961 | hutch front "lt." 3856 |
| .30 | | 4060462506P | t-molding pkg. (10' pc.) | .50 | | 4759-3501 | hutch front "lt" 3872 |
| .20 | 2 | 4759-2631 | door pnl. 19 1/4" x 15 3/4" | .15 | 9 | 4759-3411 | door panel 19 1/4" x 9 1/4" |
| .10 | 3 | 4737A5558 | fire extinguisher | .10 | 10 | 4748A3951 | door pull (includes screws) |
| .05 | 4 | 4716-1191 | fire extinguisher strap m2 | .10 | 11 | 4745C26188 | hinge (spring loaded) |
| .15 | 5 | 4737B4198 | recessed mount | 1.00 | 12 | 4759A3971 | hutch front "rt." 3856 |
| | | 4738-3088 | screw x6 | 1.00 | | 4759B3471 | hutch front "rt." 3872 |
| .55 | 6 | 4759-3951 | hutch side 3856 | .50 | 13 | 4757-812 | 3/8" h-channel connector |
| .55 | | 4759A3491 | hutch side 3872 | | | | |

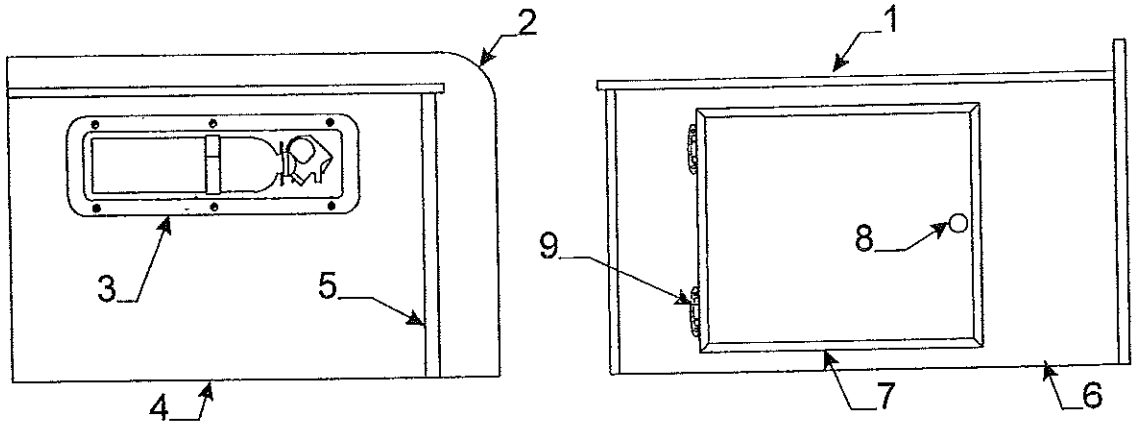


**Curbside rear cabinet assy. 3873 Pecos**

| Flat Rate | Code | Part # | Description | Flat Rate | Code | Part # | Description |
|---|---|---|---|---|---|---|---|
| .75 | 1 | 4759-4221 | cabinet top | .65 | 5 | 4716D0151 | 3/8" f-channel 24" pc. |
| .30 | | 4060462506P | t-molding pkg. (9' pc.) | .50 | 6 | 4759-4211 | cabinet front |
| .35 | 2 | 4759A4251 | gazoodi | .15 | 7 | 4759-3421 | dr. pnl. 15 3/4" x 13 1/2" |
| | 3 | Note: refer to above for fire extinguisher... | | .10 | 8 | 4748A3951 | door pull (includes screws) |
| .55 | 4 | 4759-4231 | cabinet side | .10 | 9 | 4745C26188 | hinge (spring loaded) |

| Flat Rate | Code | Part # | Shower Stall Components 3873 Pecos Description |
|---|---|---|---|
| 1.50 | 1 | 4769-6331 | shower pan & cabinet assy. |
| .75 | 2 | 4746C2461 | cassette potty |
| .15 | 3 | 4746A3761 | shower head w/bracket |
| .20 | 4 | 4741B2051 | shower hose (72" length) |
| .50 | 5 | 4741B2071 | shower diverter |
| .10 | | 4716-0848 | shower hose connector |
| .50 | 6 | 4746A1821 | basket & strainer |
| 1.50 | 7 | 4759A4631 | shower threshold |
| .30 | | 4060300083P | t-molding (threshold) (12' pc.) |
| .15 | 8 | 4756B9921 | door pnl. 16" x 12 1/4" |
| .75 | 9 | 4759A4611 | shower wall |
| .30 | | 4060400091P | 1/2" t-molding pkg. (12' pc.) |
| .20 | 10 | 4757-9261 | vent cover "plastic" |
| .50 | 11 | 4757-0921 | metal nut "white" |
| .10 | 12 | 4714A2861 | cap & strap |
| | 13 | 4737-9138 | drain adapter |
| .40 | 14 | 4752-3621 | p-trap w/union joint |
| | 15 | 4757-8561 | drain plug adapter |
| 1.00 | 16 | 4741B9301 | vent system |
| | 17 | 4741D6361 | tub package. (Not Shown) |
| | 18 | 4759A4541 | tub storage cover w/hole |
| | 19 | 4767-0241 | tub storage cover |
| .40 | 20 | 4769-6311 | shower cover board |
| .15 | 21 | 4769-6301 | hold-up strap |
| .15 | 22 | 4756-9121 | TP holder |
| | | 4747-2531 | 1/4" nylon clamp m2 |
| .25 | 23 | 4756-4441 | shower board hinge |

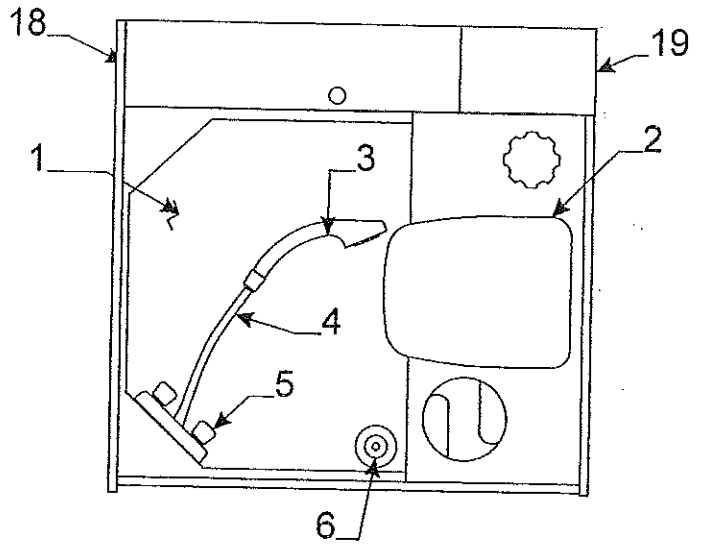


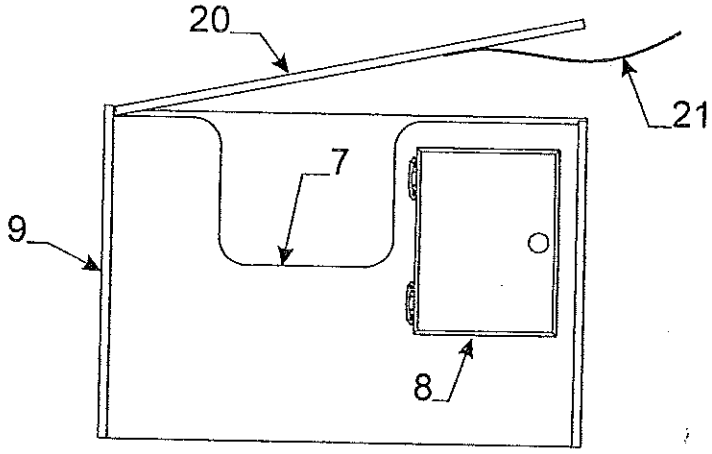


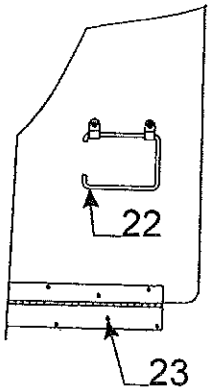


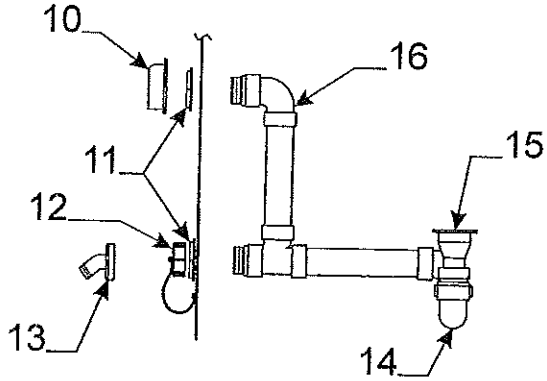


| Flat Rate | Code | Part # | RSF Hutch Components 3873 Pecos Description |
|---|---|---|---|
| .25 | 1 | 4759-4261 | hutch top |
| .30 | | 4060462506P | t-molding pkg. (10' pc.) |
| .30 | 2 | 4759-4241 | cabinet gazoodi |
| .30 | | 4060400091P | lipped t-molding (12' pc. pkg.) |
| .30 | 3 | 4759B4271 | cabinet side |
| .15 | 4 | 4759-2631 | door pnl. 19 1/4" x 15 3/4" |
| .10 | 5 | 4745C26188 | hinge (spring loaded) |
| .10 | 6 | 4748A3951 | door pull (includes screw) |

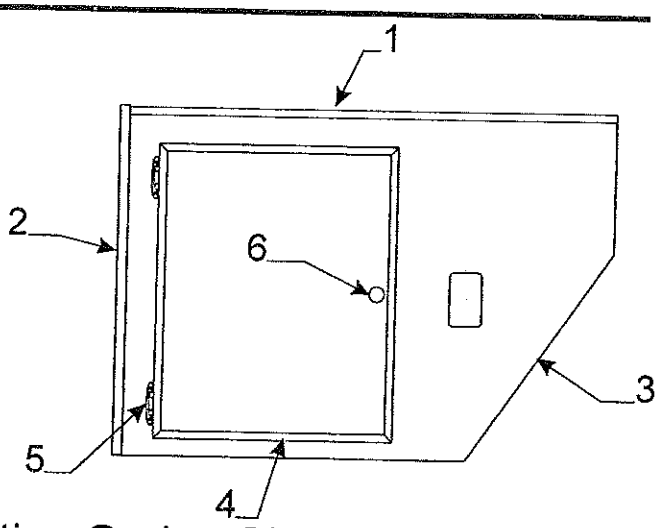

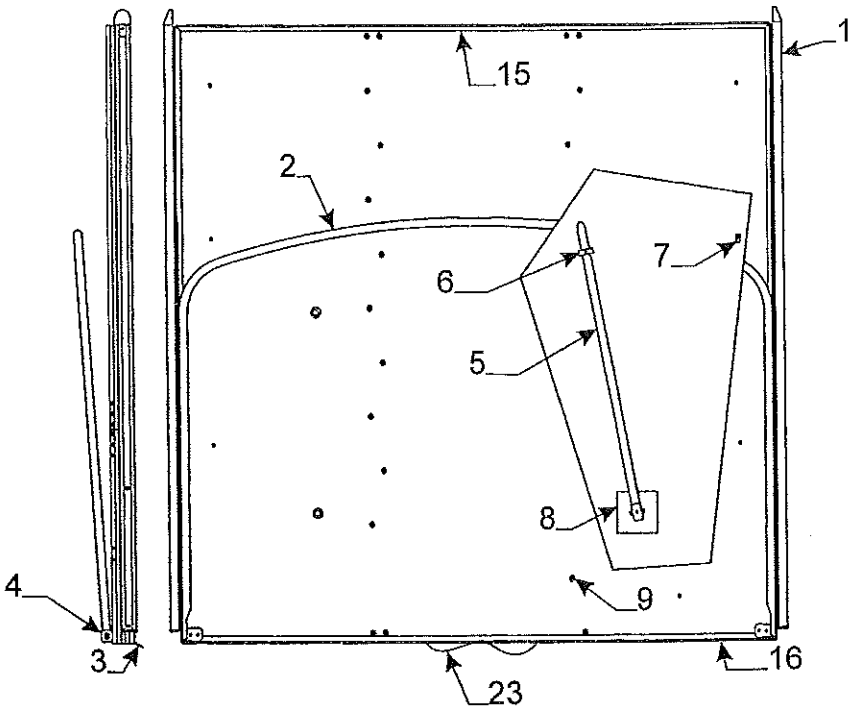


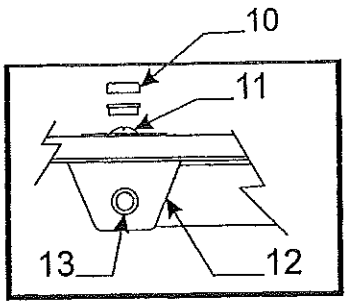


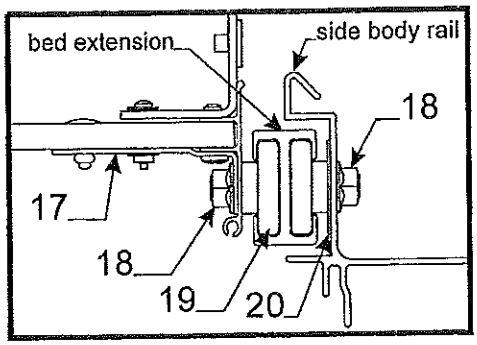


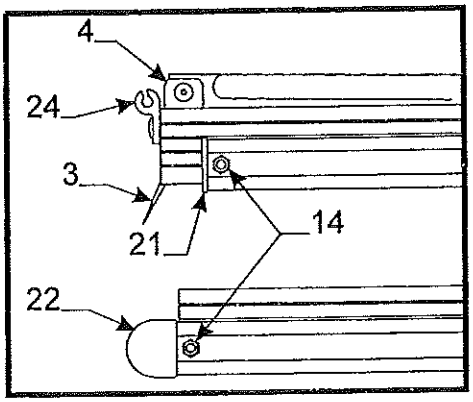


** .50 first extension
** .25 second extension

| | | |
|---|---|---|
| 3856 | 4769-5471 | Front Bed Assy. "Complete" (Double) F.R. - .75 |
| 3856 | 4769-5481 | Rear Bed Assy. "Complete" (Double) F.R. .75 |
| 3872,73 | 4769-5751 | Front Bed Assy. "Complete" (Queen) F. R. - .75 |
| 3872,73 | 4769-5481 | Rear Bed Assy. "Complete" (Queen) F.R. - .75 |

**Front/Rear Bed Assy. Components**

| Flat Rate | Code | Part # | Description |
|---|---|---|---|
| ** | 1 | 4716U4031 | bed extension (x2 per bed) |
| | | **Note: must cut to size if needed for rear bed assy.** | |
| .25 | 2 | 4714C1901 | tent bow/leg package |
| .25 | 3 | 4060300339P | vinyl bed seal pkg. (8' pc.) |
| .15 | 4 | 4720K5631 | bed bow bracket M2 |
| .05 | | 4757-9241 | 1 ½" nylon fender washer m4 |
| .20 | 5 | 4734E5881 | bed leg assy. m2 (x2 front beds) |
| .20 | | 4753-3811 | bed leg assy. (x2 rear beds) |
| .15 | 6 | 4720C0771 | bed leg clip m4 |
| | | 1203-8831 | rivet m25 (rivet clip to bed) |
| .15 | 7 | 4720D4021 | lashing hook m6 |
| | | 1203-8741 | rivet m25 (rivet hook to bed) |
| .20 | 8 | 4737A4178 | support plate |
| | 9 | 1203C8721 | rivet m25 |
| | 10 | 4739E2908 | screw cap m10 |
| | | 4739-2918 | screw cap washer m10 |
| | 11 | 4716-074 | screw |
| | | 1202B2528 | washer |
| .20 | 12 | 4734A5141 | bed leg bracket |
| | 13 | 4720A2361 | rod & pal nut |
| .20 | 14 | 1034B16128 | flat head screw |
| | | 1201B6378 | lock nut |
| 1.50 | 15 | 4759-229 | inside bed frame (Double bed) |
| 1.50 | | 4759-232 | inside bed frame (Queen bed) |
| 1.50 | 16 | 4759-230 | outside bed frame (Double bed) |
| 1.50 | | 4759-233 | outside bed frame (Queen bed) |
| .20 | 17 | 4755A2591 | bed brkt. w/mounting hardware x4 |
| | 18 | 4739-2298 | lock nut |
| .50 | 19 | 4754-8101 | bed roller, nut, bolt, & washer pkg. |
| | 20 | 1202B2908 | washer |
| .15 | 21 | 4754-8631 | bed slide end cap |
| .15 | 22 | 4754-4821 | bed slide wedge |
| .20 | 23 | 4758-9481 | pull-out handle strap & rivets |
| | | 4758-8001 | rivet "black" m25 |
| .50 | 24 | 4758-8301 | bed end retainer track & rivets |

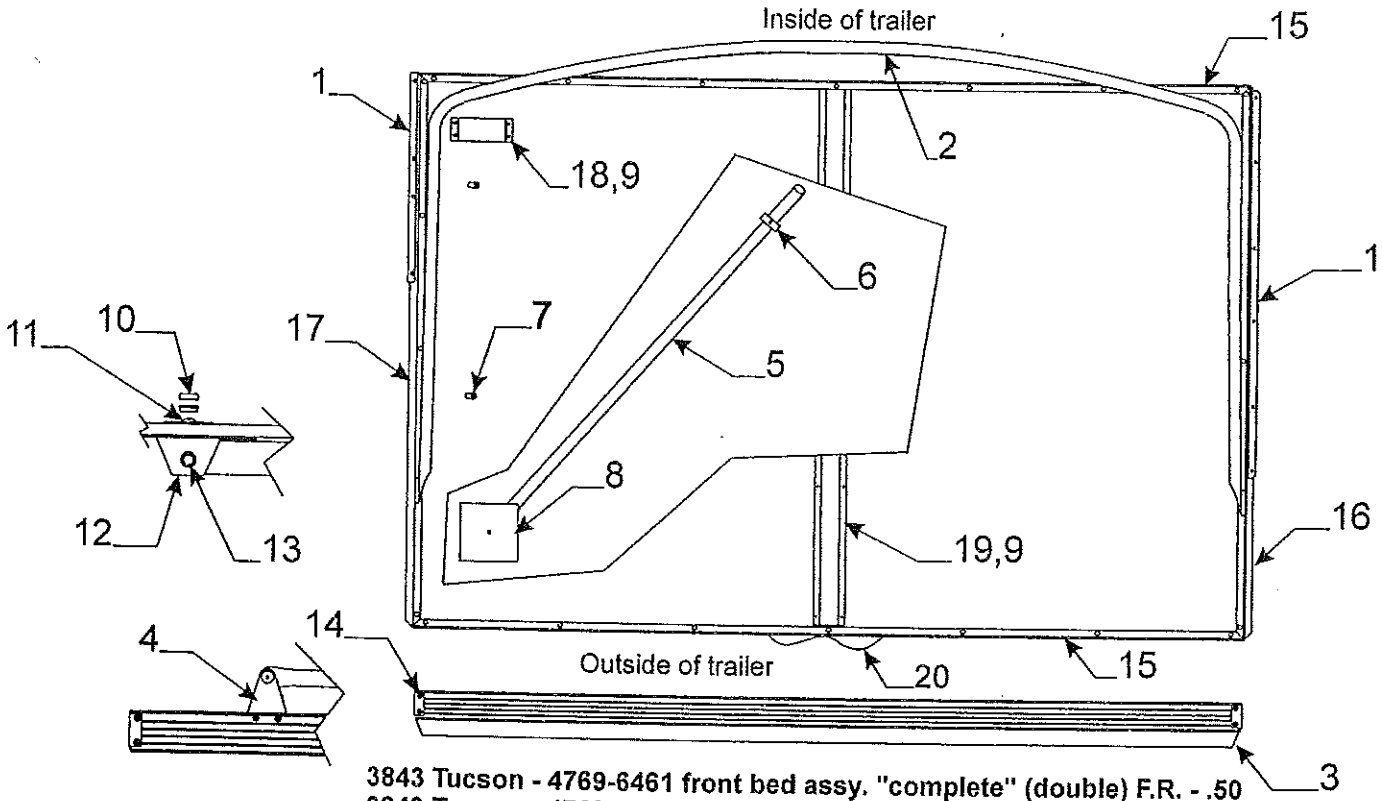


**3843 Tucson - 4769-6461 front bed assy. "complete" (double) F.R. - .50**
**3843 Tucson - 4769-6471 rear bed assy. "complete" (double) F.R. - .50**
**3875 Taos - 4747E5201 front bed assy. "complete" (double) F.R. - .50**
**3875 Taos - 4747E5481 rear bed assy. "complete" (double) F.R. - .50**

**Frt. & Rear Bed Assy. Components 3843, 3875**

| Flat Rate | Code | Part # | Description |
|---|---|---|---|
| .40 | 1 | 4747C4051 | plastic bed slide 18" |
| .40 | | 4747C3691 | plastic bed slide 40" |
| | | 4752-3061 | rivet m25 |
| .25 | 2 | 4714-4971 | tent bow/leg package 3843 |
| .25 | | 4714A1901 | tent bow/leg package 3875 |
| .25 | 3 | 4060300339P | vinyl bed seal pkg. (8' pc.) |
| .15 | 4 | 4720G5631 | bed bow bracket x2 |
| .20 | 5 | 4734E5881 | rear bed leg assy. m2 |
| .20 | | 4750-6171 | front bed leg assy. x2 |
| .15 | 6 | 4720C0771 | bed leg clip m4 |
| | | 1203-8831 | rivet m25 |
| .15 | 7 | 4720D4021 | lashing hook m6 |
| | | 1203-8741 | rivet m25 |
| .20 | 8 | 4737A4178 | support plate |
| | 9 | 1203C8721 | rivet m25 |

| Flat Rate | Code | Part # | Description |
|---|---|---|---|
| | 10 | 4739E2908 | screw cap m10 |
| | | 4739-2918 | screw cap washer m10 |
| | 11 | 4716-074 | screw |
| | | 1202B2528 | washer |
| .20 | 12 | 4734A5141 | bed leg bracket |
| | 13 | 4720A2361 | rod & pal nut |
| .20 | 14 | 4747A3221 | corner angle x4 |
| | | 1203-8641 | rivet m25 |
| .50 | 15 | 4747A3241 | front & rear bed frame |
| .60 | 16 | 4747A3231 | side rail csr/rsf |
| .60 | 17 | 4749A8151 | side rail csf/rsr |
| .20 | 18 | 4749A4891 | bed stop |
| .40 | 19 | 4747A1161 | bed channel |
| .20 | 20 | 4758-9481 | pull-out handle strap & rivets |
| | | 4758-8001 | rivet "black" m25 |

**Mattress Assemblies & Covers Flat Rate .50 per cover**

| Model | Frt. Matt. assy. | Frt. Matt. Cover |
|---|---|---|
| 3843, 3875 | 4749P6361 | 4716P6361 |
| 3872, 3873 | 4769-8681 | 4714-8681 |
| 3856 Yuma | 4769-8691 | 4714-8691 |

**Flat Rate .10 Matt assy.**

| Model | Rear Matt. assy. | Rear Matt. Cover |
|---|---|---|
| 3843, 3875 | 4749P6361 | 4716P6361 |
| 3872, 3873 | 4769-8681 | 4714-8681 |
| 3856 Yuma | 4769-8681 | 4714-8681 |

**Mattress Assembly Dimensions**

| Model | Frt. Matt. Assy. | Rear Matt. Assy. |
|---|---|---|
| 3843, 3875 | 72" x 48" x 3 1/2" | 72" x 48" x 3 1/2" |
| 3856 Yuma | 77" x 48" x 3 1/2" | 77" x 66" x 3 1/2" |
| 3872, 3873 | 77" x 66" x 3 1/2" | 77" x 66" x 3 1/2" |

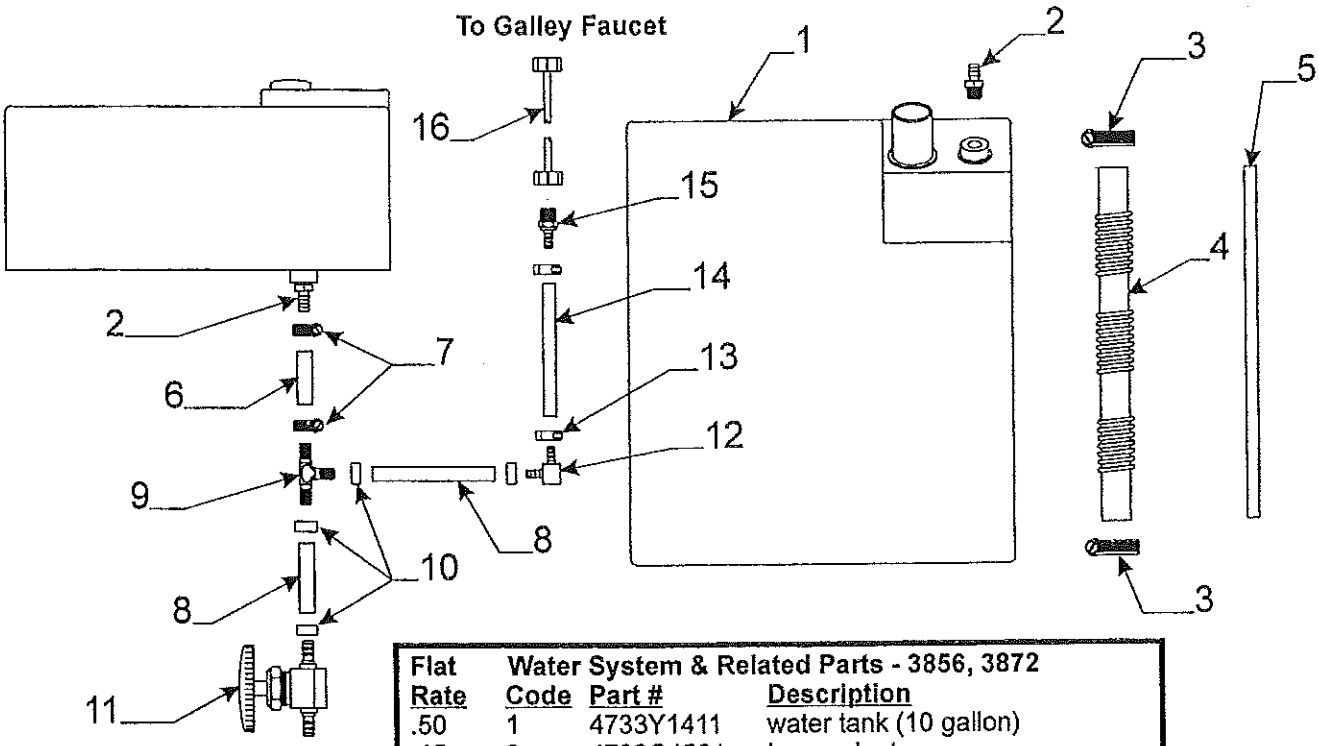


| Flat Rate | Water System & Related Parts - 3856, 3872 Code | Part # | Description |
|---|---|---|---|
| .50 | 1 | 4733Y1411 | water tank (10 gallon) |
| .15 | 2 | 4732C4561 | hose adapter |
| | 3 | 4715-4501 | 1 1/4" hose clamp |
| .35 | 4 | 4731H1081 | water fill hose 24" pc. |
| | 5 | 4060050003F | 1/2" h.p. hose (sold/foot) |
| | 6 | 4714-038 | 3/8" h.p. hose (sold/foot) |
| | 7 | 4731-3058 | adjustable hose clamp |
| | 8 | 4060050006P | pex tubing "cold" (20' pc. pkg.) |
| .25 | 9 | 4741C2381 | barbed tee "brass" M10 |
| | 10 | 4741A2751 | stainless steel clamp M100 |
| .20 | 11 | 4741D2361 | line drain "brass" |
| 25 | 12 | 4741C2391 | brass elbow "Pex" m2 |
| .25 | 13 | 4741A2751 | stainless steel clamp m100 |
| | 14 | 4060050006P | pex tubing "cold" (20' pc. pkg.) |
| .20 | 15 | 4757-3631 | brass adapter 3/8" barb "Pex" |
| | 16 | 4757-3711 | 52" pex riser |

Note: Refer to opposite page for electric water pump...

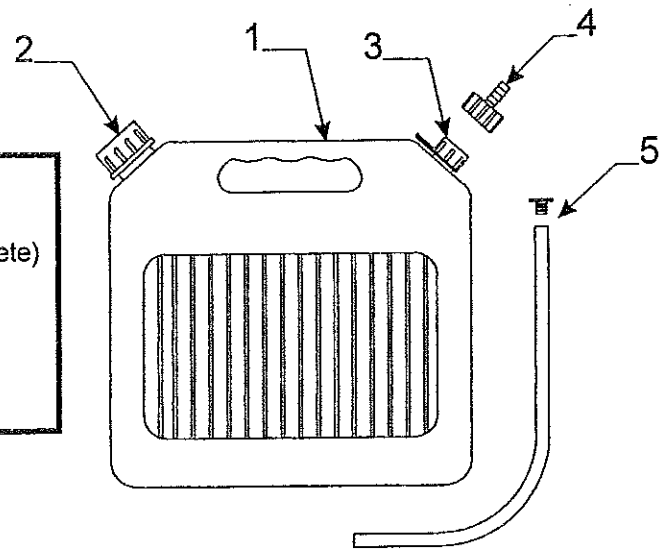


| Flat Rate | Portable Water Tank 3843, 3875 Code | Part # | Description |
|---|---|---|---|
| .10 | 1 | 4735-2131 | water tank 5 gal. (complete) |
| | | 4735C0988 | water tank decal |
| | 2 | 4714-0231 | large cap |
| | 3 | 4714-0221 | small cap & strap |
| | 4 | 4714-0241 | barb stem & collar |
| | 5 | 4714A0671 | suction stem |

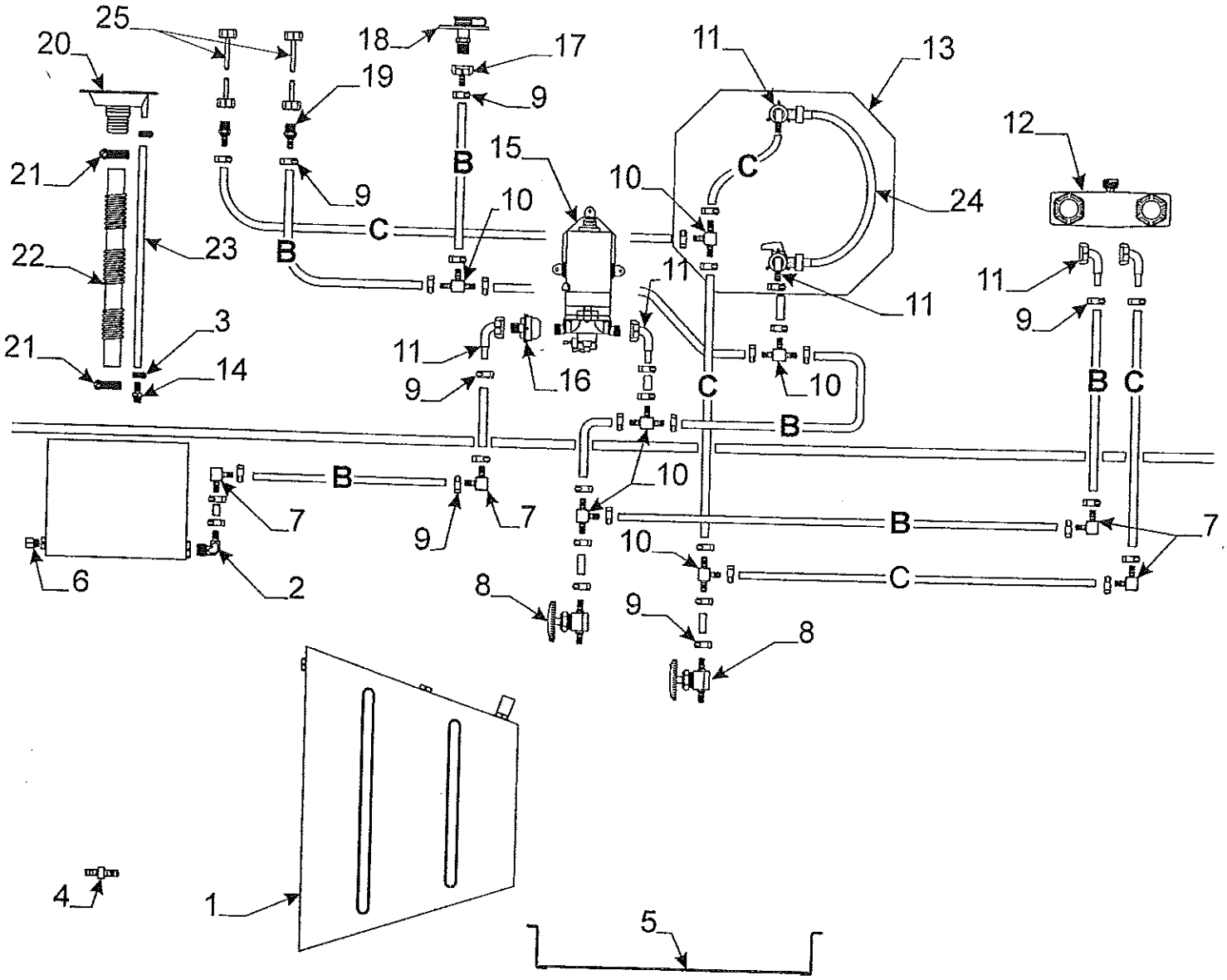


B 4060050006P 3/8" I.D. Pex tubing "cold" (20' pc. pkg.)
C 4060050007P 3/8" I.D. Pex tubing "hot" (20' pc. pkg.)

4714-038 3/8" I.D. High pressure hose (sold/foot)

**Water System & Related Parts**

| Flat Rate | Code | Part # | Description\ |
|---|---|---|---|
| 1.50 | 1 | 4757A0471 | water tank 3873 |
| .25 | 2 | 4741C2371 | elbow "plastic" |
| | 3 | 4731-3058 | adjustable hose clamp 3/8" |
| | 4 | 4755-4821 | brass barbed union m10 |
| .20 | 5 | 4758-5381 | tank hanger x2 (all) |
| .15 | 6 | 1218-7001 | plug |
| .25 | 7 | 4741C2391 | brass elbow "Pex" m2 |
| .20 | 8 | 4741E2361 | brass line drain "Pex" |
| .25 | 9 | 4741A2751 | stainless steel clamp m100 |
| 25 | 10 | 4741C2381 | brass tee "Pex" m10 |
| .20 | 11 | 4741B9061 | copper swivel elbow |
| .50 | 12 | 4741B2071 | shower diverter |
| | 13 | 4750-3421 | water heater |

| Flat Rate | Code | Part # | Description |
|---|---|---|---|
| .15 | 14 | 4732B4561 | hose adapter |
| .50 | 15 | 4741D5571 | electric water pump |
| .25 | 16 | 4747A8311 | water filter |
| .20 | 17 | 4741A9561 | female adapter "copper" |
| .30 | 18 | 4732F1521 | city fill |
| .20 | 19 | 4757-3631 | brass adapter 3/8" barb "Pex" |
| .30 | 20 | 4731D1711 | fill spout |
| | 21 | 4715-4501 | adjustable hose clamp |
| .35 | 22 | 4731H1081 | water fill hose (5' pc.) |
| .20 | 23 | 4060050003F | 1/2" h.p. hose (sold/ft.) |
| | 24 | 4765-9971 | water heater bypass kit |
| | 25 | 4757-3671 | 48" pex riser |

* Warranted By Vendor

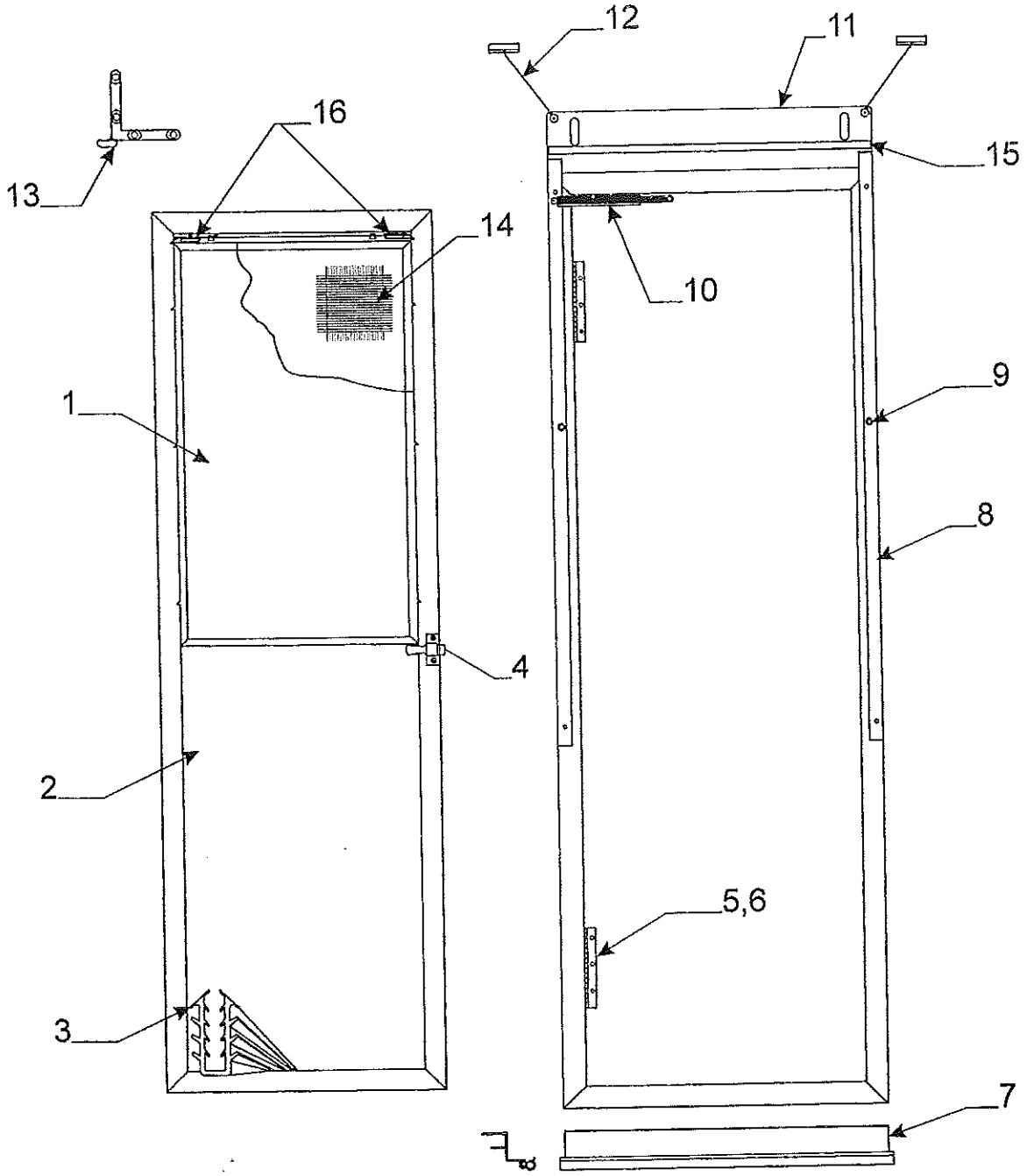


.30 Flat Rate Screen Door Complete

Note: parts marked w/* asterisk are not included w/screen door

**4757D5191 Screen Door Assy. (All)**

| Flat Rate | Code | Part # | Description |
|---|---|---|---|
| .10 | 1 | 4716E3401 | top sliding window pane |
| .40 | 2 | 4754B1541 | stationary window pane |
| .15 | 3 | 4060000086F | rubber seal (sold/foot) |
| | | Note: around perimeter of window pane | |
| .15 | 4 | *4742-9671 | door latch assembly |
| .15 | 5 | 4720C3601 | hinge x2 |
| | 6 | 1203-8641 | rivet m25 |
| .25 | 7 | *4747B5621 | screen door support |
| | | *4060000399F | rubber seal (sold/foot) |
| .20 | 8 | 4754-3811 | vel-stick (pkg. of 2) |

| Flat Rate | Code | Part # | Description |
|---|---|---|---|
| .05 | 9 | 4730A3548 | stud w/screw x2 |
| .20 | 10 | 4731A8201 | spring package |
| .30 | 11 | ** 4758A0571 | top bracket (all except Tucson) |
| .30 | | ** 4758A0561 | top bracket (Tucson only) |
| .15 | 12 | 4734D5211 | cable assy. m6 |
| .50 | 13 | 4710-3791 | corner brace hinge m2 |
| | 14 | 4716-1381 | screened stationary pane |
| .75 | | 4716-1111 | screening 36" x 18 1/2" |
| .10 | 15 | 4060000023P | d-seal "white" (5' pkg.) |
| .50 | 16 | 4716-3811 | window lock pkg. rt./lt. |

**** NOTE: TOP BRKT. INCLUDES (2) PLASTIC LATCHES & LATCH MOUNTING HARDWARE**

**Dinette Area Cushion/Backrest Assemblies & Covers** - 2004 Destiny SE Series Flat Rate .10 Assembly - .25 Cover

| Model | Cushion Assembly | Cushion Cover | Model | Backrest Assembly | Backrest Cover |
|---|---|---|---|---|---|
| 3843 Tucson | 4759-8821 | 4714-8821 | 3843 Tucson | 4759-8831 | 4714-8831 |
| 3875 Taos | 4749N6581 | 4716N6581 | 3875 Taos | 4749N6571 | 4716N6571 |
| 3856 Yuma | * 4759B8921 | 4714B8921 | 3856 Yuma | 4759A8931 | 4714A8931 |
| 3856 Yuma | ** 4759-8851 | 4714-8851 | 3872 Cortez | + 4759A3641 | 4714A3641 |
| 3872 Cortez | 4759A3631 | 4714A3631 | 3872 Cortez | ++ 4759-8861 | 4714-8861 |
| 3873 Pecos | 4759-8991 | 4714-8991 | 3873 Pecos | 4759-8901 | 4714-8901 |

Plastic Cushion Button x2 - 4710-2681 m5

* Front cushion assy. 40" x 17 1/4"
** Rear cushion assy. 40" x 15"

\+ Backrest w/wood insert
++ Backrest w/out wood insert

**Dinette Cushion/Backrest Dimensions**

| Model | Cushion Assembly | Backrest Assembly |
|---|---|---|
| 3843 Tucson | 40 5/8" x 23 3/8" x 4" | 40 5/8" x 13 1/8" x 4" |
| 3875 Taos | 40 5/8" x 21" x 4" | 40 5/8" x 15 1/2" x 4" |
| 3856 Yuma | * 40" x 17 1/4" x 4" | 40" x 16 3/4" x 4" |
| 3856 Yuma | ** 40" x 15" x 4" | 42 5/8" x 18 1/8" x 4" |
| 3872 Cortez | 42 5/8" x 17 3/8" x 4" | 42 5/8" x 18 1/8" x 4" |
| 3873 Pecos | 40 5/8" x 21 1/2" x 4" | 39 1/2" x 14" x 4" |

**Drape Package (Less Valance Pkg.)**
**Note: Package includes privacy curtains**

| Model | Drape Pkg. | # Of Panels | Flat Rate |
|---|---|---|---|
| 3843 Tucson | 4724P8361 | 8 | .30 |
| 3875 Taos | 4724N8361 | 8 | .30 |
| 3856 Yuma | 4767B5821 | 8 | .30 |
| 3872, 3873 | 4769-5931 | 9 | .30 |

**Drape Tab C-Shape** m60 - 4750-2891 Flat Rate - .05

**Note:** Must order complete drape pkg. for 3875 Taos

**Privacy Curtain Pkgs. (Set of 2 Panels)**
.15 4723D7961 - 3856, 72, 73
.15 4723P7881 - 3843 Tucson

**Note:** Must order complete drape pkg. for 3875 Taos

**Single Drape Panel w/Safety Straps**
.15 4716D8731 Single Drape Pnl. 49" x 43 1/2" - 3843 Tucson
.15 4716D8741 Single Drape Pnl. 24" x 43 1/2" - 3843 Tucson
.15 4716D8761 Single Drape Panel 52" x 45" - 3856 Yuma
.15 4716F8771 Single Drape Panel 35" x 45" - 3856,72,73
.15 4716E8781 Single Drape Panel 43" x 45" - 3872,73

**Drape Tie Package** (Qty. 1) - 4759-2421 (all) Flat Rate - .05

**Valance Package** - 4755E2761 - 3843 Tucson, 3875 Taos, 3856 Yuma
Flat Rate - .25 4759-8891 - 3872 Cortez, 3873 Pecos

**Shower Curtain "white vinyl"** - 4749A6661 (3873) Flat Rate - .20

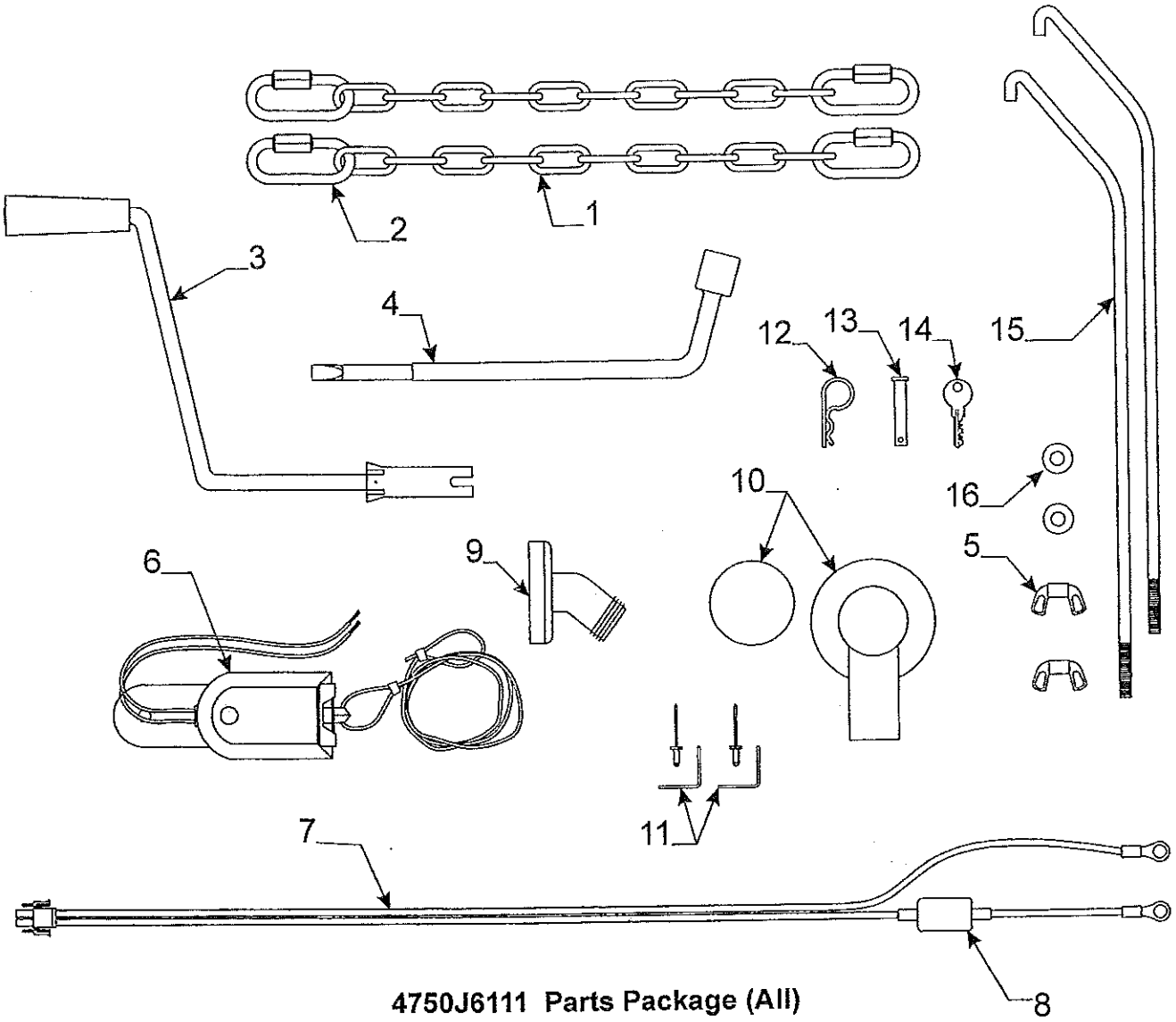


**4750J6111 Parts Package (All)**

| Flat Rate | Parts Package Component Parts Code | Part # | Description |
|---|---|---|---|
| | 1 | 4757-3901 | 29" tow chain w/quick links m2 |
| | 2 | 4757-3891 | quick link (sold/signally) |
| | 3 | 4747G4141 | crank handle |
| | 4 | 4749A1861 | lug nut wrench |
| | 5 | 1201-6258 | wing nut x2 |
| | 6 | 4746-0401 | breakaway switch |
| | 7 | 4749B5531 | battery harness w/15 amp breaker |
| | 8 | 4751-4811 | 15 amp circuit breaker |
| | 9 | 4737-9138 | drain adapter |
| | 10 | 4734C3781 | regulator cover (long) |
| | | 4751-9571 | round regulator cover |
| | 11 | 4753E6781 | battery angle pkg. |
| | 12 | 4732A4791 | safety pin m10 |
| | 13 | 4771-2631 | hitch pin m5 |
| | 14 | 4730B3211 | key m10 # 8025 (gold plated) |
| | 15 | 4733G6281 | gas bottle mounting brkt. pkg. |
| | | Note: pkg. includes (2) wing nuts, washers | |
| | 16 | 1202B0468 | washer x2 m10 |

** Serial Number Of Gas Bottle Must Be Supplied When Submitting Warranty

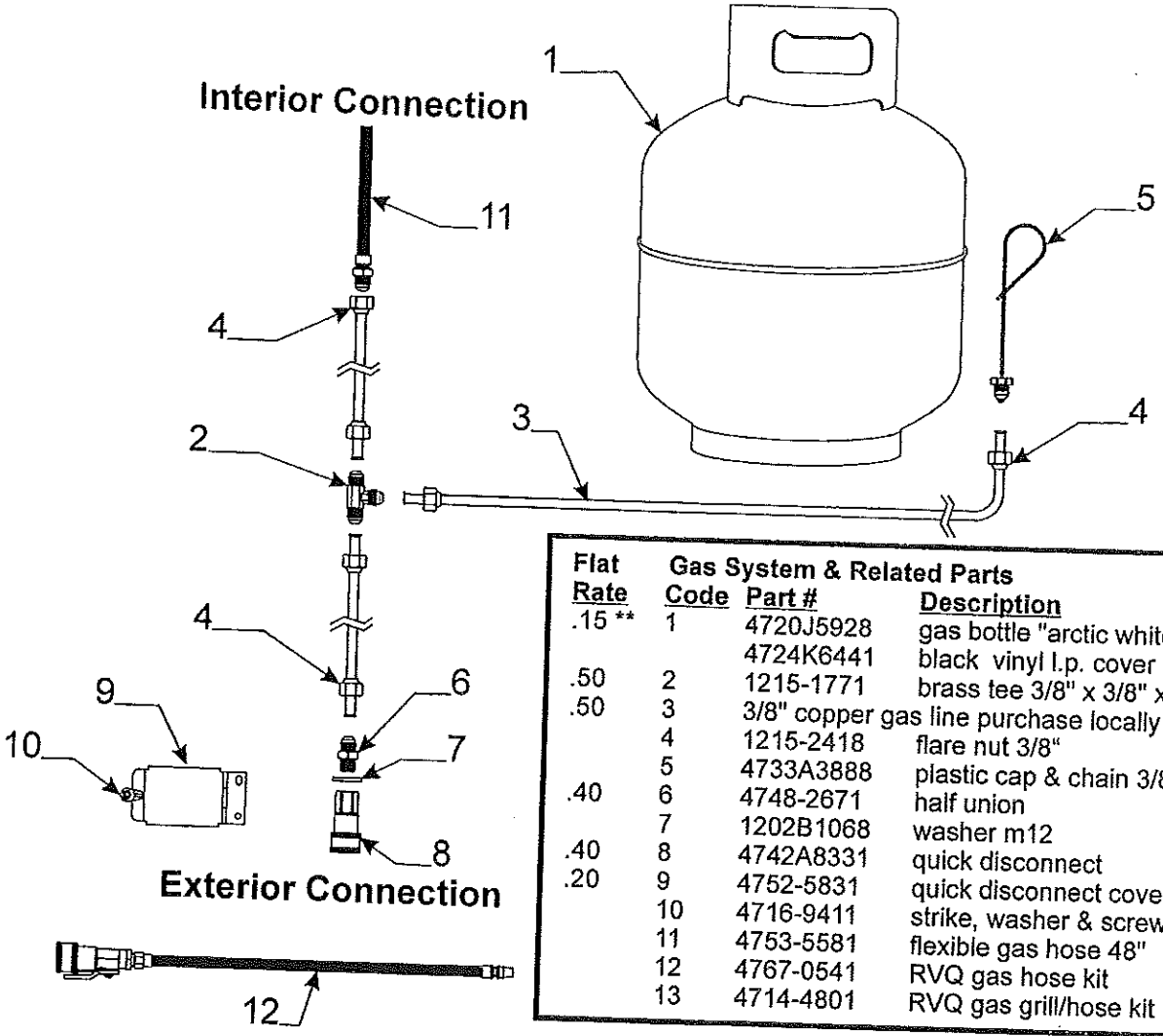


| Flat Rate | Code | Part # | Description |
|---|---|---|---|
| | | **Gas System & Related Parts** | |
| .15 ** | 1 | 4720J5928 | gas bottle "arctic white" |
| | | 4724K6441 | black vinyl l.p. cover |
| .50 | 2 | 1215-1771 | brass tee 3/8" x 3/8" x 3/8" |
| .50 | 3 | 3/8" copper gas line purchase locally | |
| | 4 | 1215-2418 | flare nut 3/8" |
| | 5 | 4733A3888 | plastic cap & chain 3/8" |
| .40 | 6 | 4748-2671 | half union |
| | 7 | 1202B1068 | washer m12 |
| .40 | 8 | 4742A8331 | quick disconnect |
| .20 | 9 | 4752-5831 | quick disconnect cover & hinge |
| | 10 | 4716-9411 | strike, washer & screw pkg. |
| | 11 | 4753-5581 | flexible gas hose 48" |
| | 12 | 4767-0541 | RVQ gas hose kit |
| | 13 | 4714-4801 | RVQ gas grill/hose kit (Complete) |

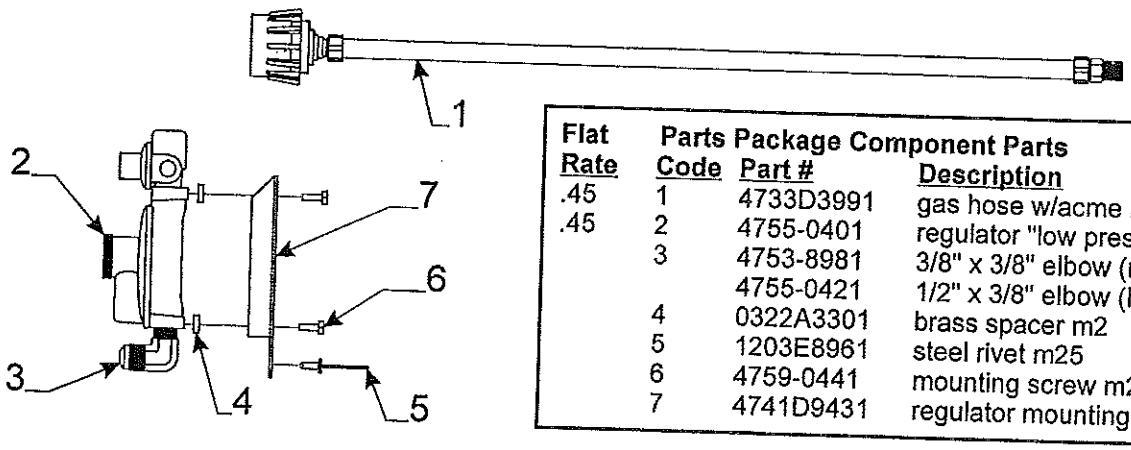


| Flat Rate | Code | Part # | Description |
|---|---|---|---|
| | | **Parts Package Component Parts** | |
| .45 | 1 | 4733D3991 | gas hose w/acme nut 21" |
| .45 | 2 | 4755-0401 | regulator "low pressure" |
| | 3 | 4753-8981 | 3/8" x 3/8" elbow (non hot water) |
| | | 4755-0421 | 1/2" x 3/8" elbow (hot water) |
| | 4 | 0322A3301 | brass spacer m2 |
| | 5 | 1203E8961 | steel rivet m25 |
| | 6 | 4759-0441 | mounting screw m2 |
| | 7 | 4741D9431 | regulator mounting brkt. |

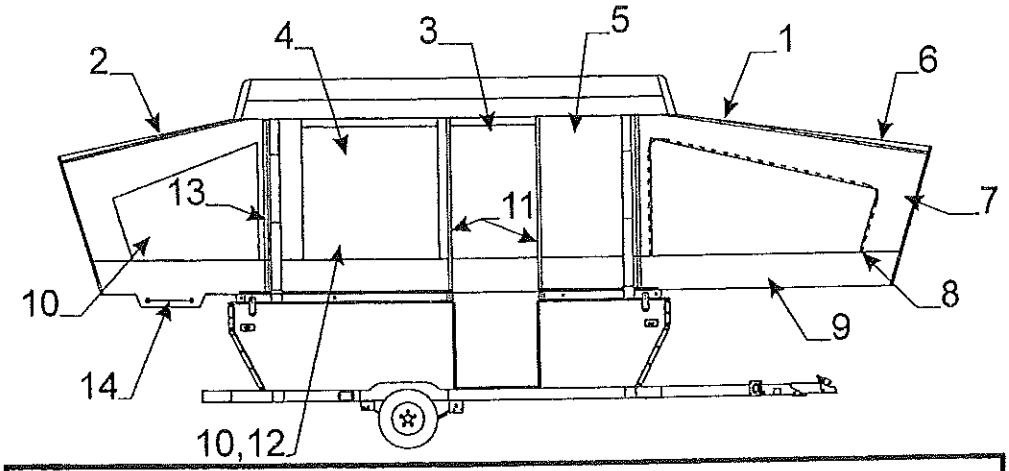


| Flat Rate | Sunbrella Tenting & Components Code | Part # | Description |
|---|---|---|---|
| .50 | 1 | 4769-6391 | front boot 3843 Tucson |
| .50 | | 4769-5701 | front boot (double) 3856 Yuma |
| .50 | | 4769-5711 | front boot 3872 Cortez, 3873 Pecos |
| .50 | | 4747G6531 | front boot 3875 |
| .50 | 2 | 4769-6391 | rear boot 3843 Tucson |
| .50 | | 4769-5711 | rear boot (queen) 3856, 3872, 3873 |
| .50 | | 4747G6531 | front boot 3875 |
| .20 | 3 | 4769-6401 | large window 3843 Tucson |
| .20 | | 4769-5661 | large window 3856 Yuma |
| .20 | | 4747H6501 | large window 3875 |
| .20 | | 4759-8711 | large window 3872 Cortez, 3873 Pecos |
| .20 | 4 | 4769-6411 | small window 3843 Tucson |
| .20 | | 4769-5681 | small window 3856 Yuma |
| .20 | | 4759-8731 | small window 3872 Cortez, 3873 Pecos |
| .20 | | 4747H6521 | small window 3875 |
| .15 | 5 | 4769-6421 | door seal 3843 Tucson |
| .15 | | 4769-5691 | door seal 3856 Yuma |
| .15 | | 4759-8721 | door seal 3872 Cortez, 3873 Pecos |
| .15 | | 4748G6631 | door seal 3875 |
| | 6 | 8118501430P | top vinyl pkg. (85" x 3 yards) |
| | 7 | 4716C0851 | sunbrella patch package (12" x 14") |
| | | 4716D0851 | camper tex patch pkg. (12" x 14") |
| | 8 | 6650500131F | zipper (sold/yard) used around window |
| | | 1225A4461 | zipper pull m5 |
| | 9 | 8118001439P | blue bottom vinyl facing pkg. (3 yd. x 80") |
| | 10 | 4714E1611 | screen package (84" x 3 yards) |
| | | 4714A0361 | screen package (84" x 13 yards) |
| | 11 | 4350000009P | 1" velcro hook (10' pc. Pkg.) |
| | 12 | 4716-2401 | clear window vinyl (41" x 2 yards) |
| | 13 | 1225G3768 | 45 1/2" side zipper pin half (all except 3843) |
| | | 1225G3758 | 45 1/2" side zipper slider half (all except 3843) |
| | | 1225-3678 | 48 1/2" side zipper pin half (3843 Tucson) |
| | | 1225-3688 | 48 1/2" side zipper slider half (3843 Tucson) |
| | | 1225-3658 | 52" side zipper pin half (3875 Taos) |
| | | 1225-3668 | 52" side zipper slider half (3875 Taos) |
| .50 | 14 | 4060000245CP | shock cord (150' package) |
| .50 | | 4714C6021 | shock cord & hooks m2 (two 14' lengths) |
| .15 | | 4724A2011 | shock cord termination (plastic hook) m10 |
| | 15 | 4060000024F | arrowhead seal (sold/foot) |
| .30 | 16 | 4735D6721 | extension harness (all except Taos) |
| .30 | | 4757-6101 | extension harness 3875 Taos |
| .50 | 17 | 4743-1588 | k-kote seam sealer |
| | 18 | 4728-5641 | tent retainer pkg. |
| .30 | 19 | 4710-1001 | vinyl daubing "white" m2 |
| .30 | | 4710-1011 | vinyl daubing "grey" |

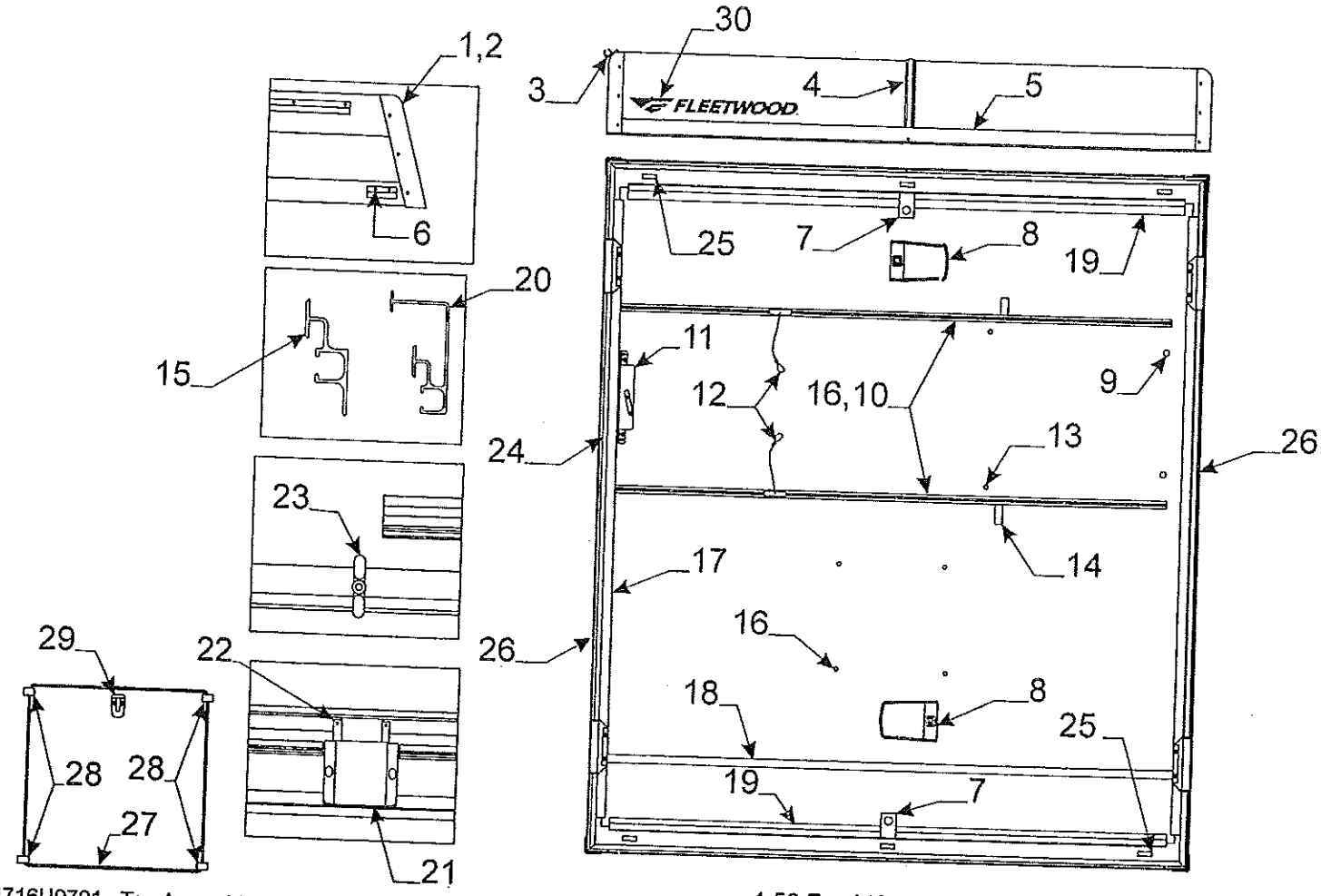


| | | |
|---|---|---|
| 4716U9701 | Top Assembly 3843 Tucson, 3875 Taos F.R. - 4.50 | 1.50 For A/C |
| 4768B5041 | Top Assembly 3856 Yuma F.R. - 3.00 | 1.00 For Crossbars |
| 4769-5921 | Top Assembly 3872 Cortez F.R. - 3.00 | 1.00 For Disposal |
| 4769-6161 | Top Assembly 3873 Pecos F.R. - 3.00 | |

4716-8991 Roof Brace Kit (all except 3843, 3875)

| Flat Rate | Code | Part # | Description |
|---|---|---|---|
| .50 | 1 | 4716U1981 | top corner pkg. (pkg. of 4) |
| | | 4350000058F | saturated foam tape (sold/foot) |
| | 2 | 4745-3968 | screw "painted" |
| .50 | 3 | 4757-3561 | canopy track (must cut to size) |
| 1.00 | 4 | 4752-02791 | center seam (must cut to size) |
| | | 4060400096F | vinyl screw cover (sold/foot) |
| | | 4741-3508 | hex head screw |
| | | 4350000058F | saturated foam tape (sold/foot) |
| .50 | 5 | 4756-0681 | frt./rr. extru. (all except 3843, 75) |
| | | 4741E21381 | frt./rr. seal extrusion 3843, 75 |
| .15 | 6 | 4750A9581 | top strike m2 (all) |
| | | 4744C2461 | torx head screw "painted" m2 |
| | | 1201B6958 | nut (x2 per strike) |
| .15 | 7 | 4741F11381 | tent support brkt. |
| | | 4741C9368 | screw "painted" x2 |
| .15 | 8 | 4737K5911 | single dome light |
| | | 4758-1361 | dome light lens |
| | | 1103B1028 | screw x4 |
| | 9 | 4737-3211 | rubber button m8 |
| .30 | 10 | 4733H47181 | screen door track x2 |
| | | 4744B4611 | expansion rivet m25 |
| .20 | 11 | 4749C5571 | screen door bracket |
| | | 4747-2558 | expansion rivet m25 |
| | | 4749-2138 | snap button m2 |
| | | 1203-8631 | rivet m25 |
| .15 | 12 | 4734D5211 | screen door cable m6 (all) |
| | 13 | 4730A3548 | stud w/screw x2 |
| .15 | 14 | 4723A5061 | strap x2 |

| Flat Rate | Code | Part # | Description |
|---|---|---|---|
| .30 | 15 | 4756A0631 | tent track (frt./rr.) 3856,72,73 |
| .30 | | 4747B1271 | tent track (frt./rr.) 3843,75 |
| | | 1103E1018 | screw stainless steel |
| | 16 | 1203-9258 | plastic accordion rivet m25 |
| | 17 | 4754A9831 | side cove x2 (must cut to size) |
| | | 4747-2558 | expansion rivet m25 |
| .20 | 18 | 4350400004F | vinyl tape (sold/foot) |
| | 19 | 4756B0671 | cove (front/rear) 3856,72,73 |
| | | 4745C0391 | cove (front/rear) 3843,75 |
| | | 4747-2558 | expansion rivet m25 |
| .30 | 20 | 4754B9851 | tent & val. track (must cut to size) |
| | | 1103E1018 | screw stainless steel |
| .20 | 21 | 4747D5521 | lift pocket cover x4 (all) |
| | | 4741D3558 | hole plug x2 |
| | | 4351400005F | velcro loop (sold/yard) |
| .25 | 22 | 4741B5431 | lift pocket x4 |
| | | 1201B6378 | lock nut ( x2 per pocket) |
| .15 | 23 | 4743-2501 | plastic screen dr. latch pkg. |
| | | Note: pkg. includes (2) latches & mounting hardware | |
| .50 | 24 | 4060100399P | rubber top seal (40' package) |
| | 25 | 4724F2631 | velcro hook m6 |
| .75 | 26 | 4747E1291 | side seal extrusion 3843,75 |
| .75 | | 4759-240 | side seal extrusion 3856 |
| .75 | | 4759B335 | side seal extrusion 3872, 3873 |
| .10 | 27 | 4755B5231 | shower curtain rod 3873 |
| .15 | 28 | 4755-5211 | shower rod strap x4 3873 |
| .20 | 29 | 4767-0111 | shower head brkt. 3873 |
| .25 | 30 | 4761-1958 | Fleetwood decal |